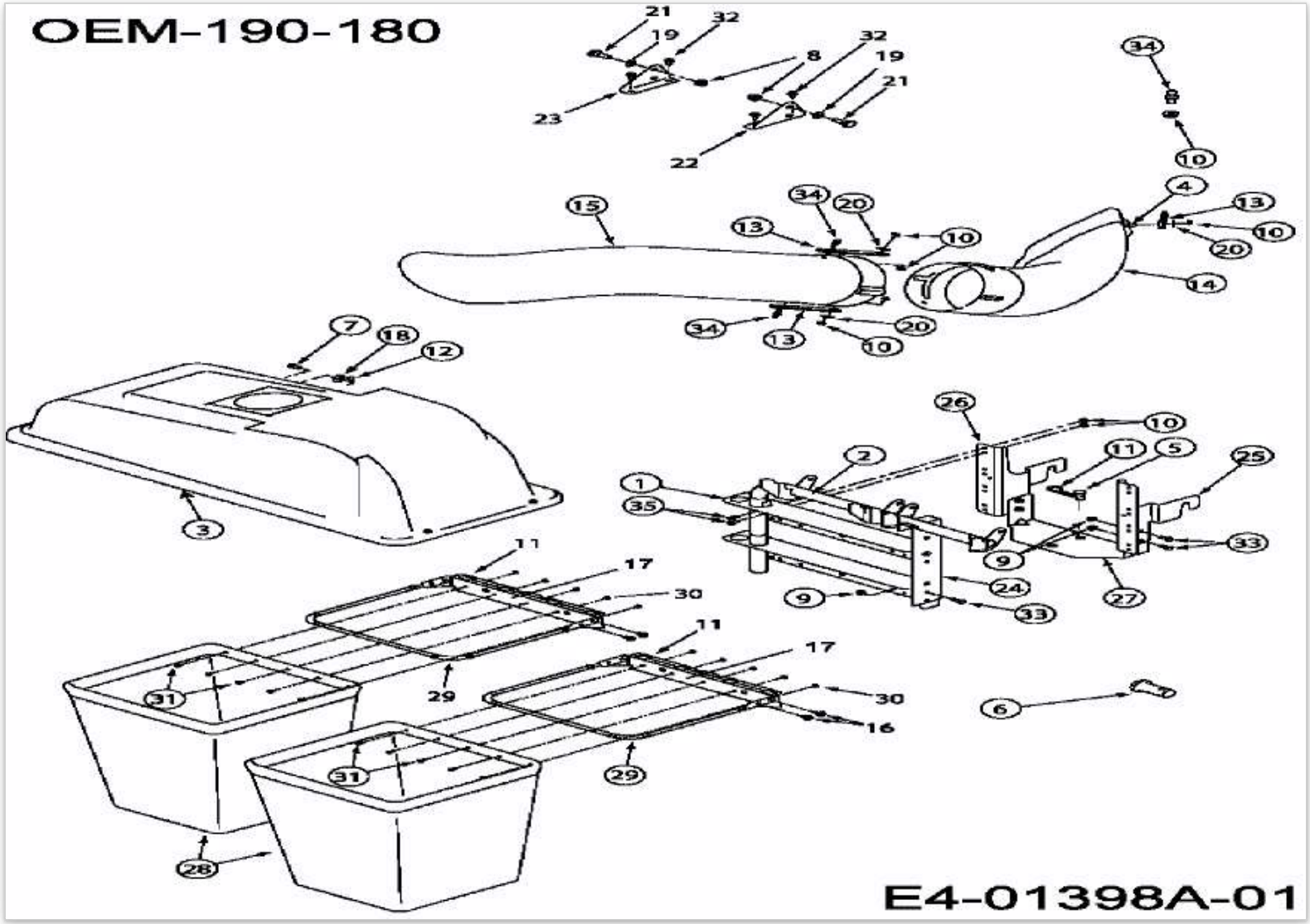
OEM-190-180
E4-01398A-01