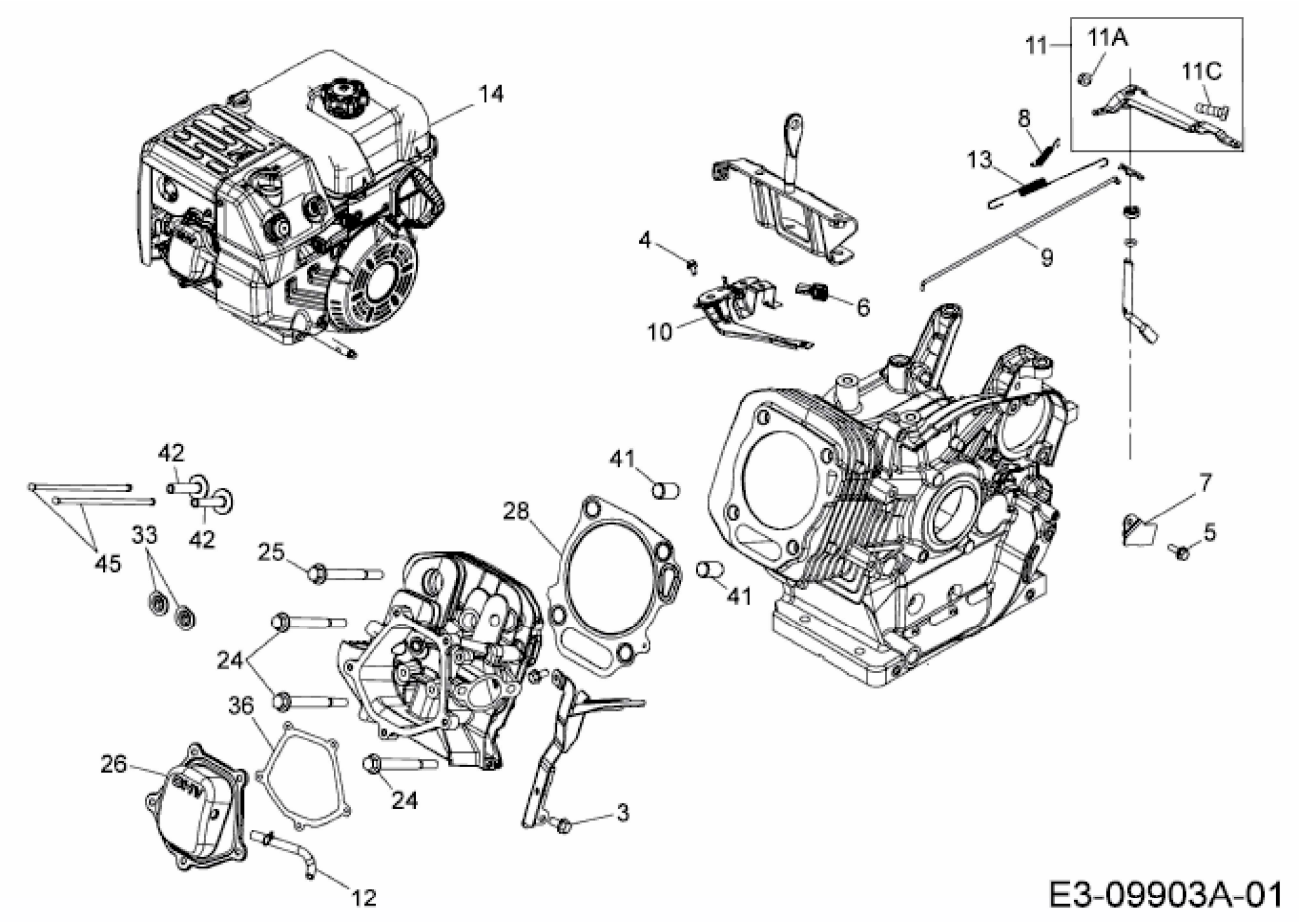683-WH > 752Z683-WH (2017) > REGELUNG, VENTILDECKEL