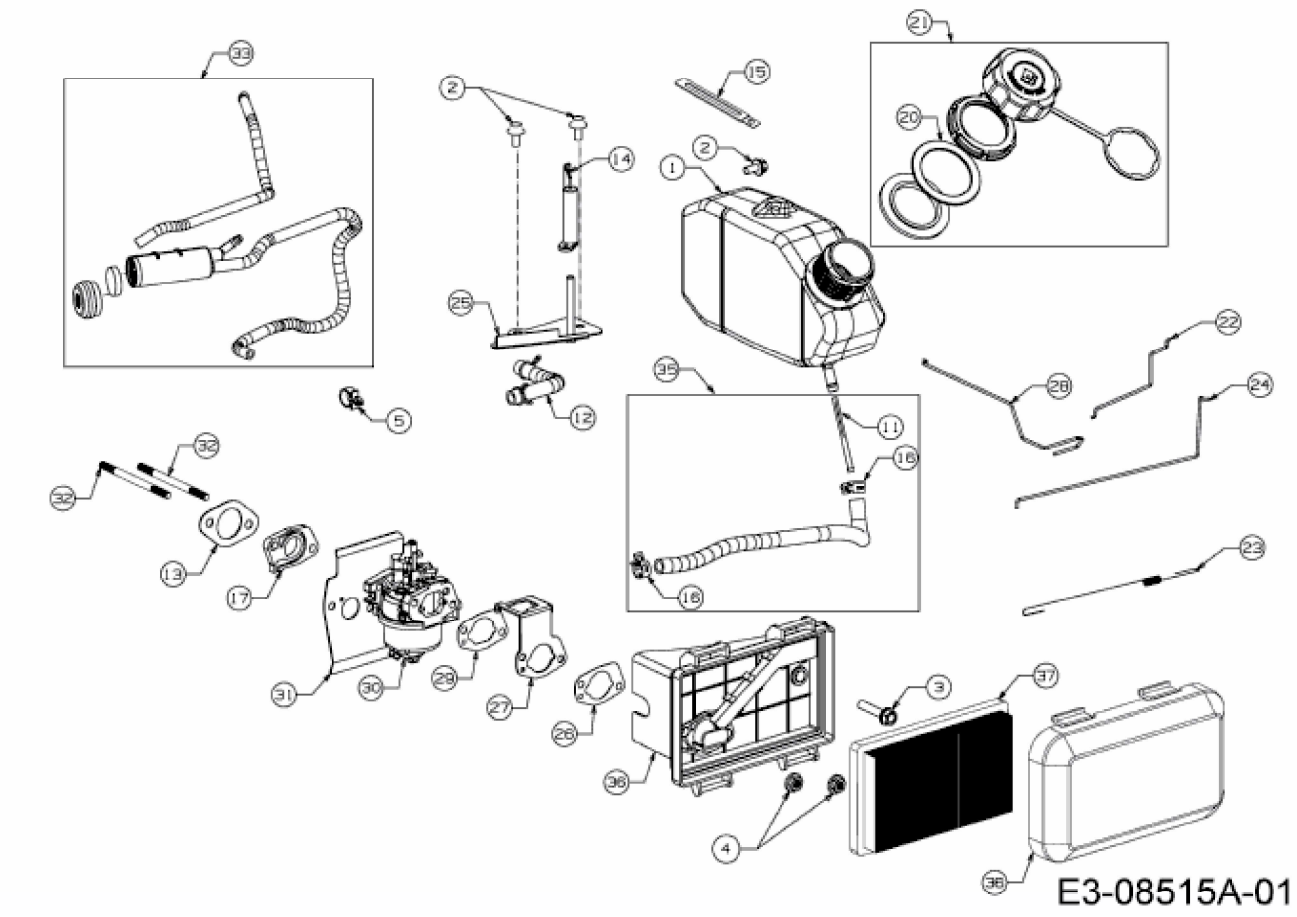5 X 65 RU > 752Z5X65RU (2015) > LUFTFILTER, TANK, VERGASER