5 T 65 RH > 752Z5T65RH (2016) > SHORT BLOCK

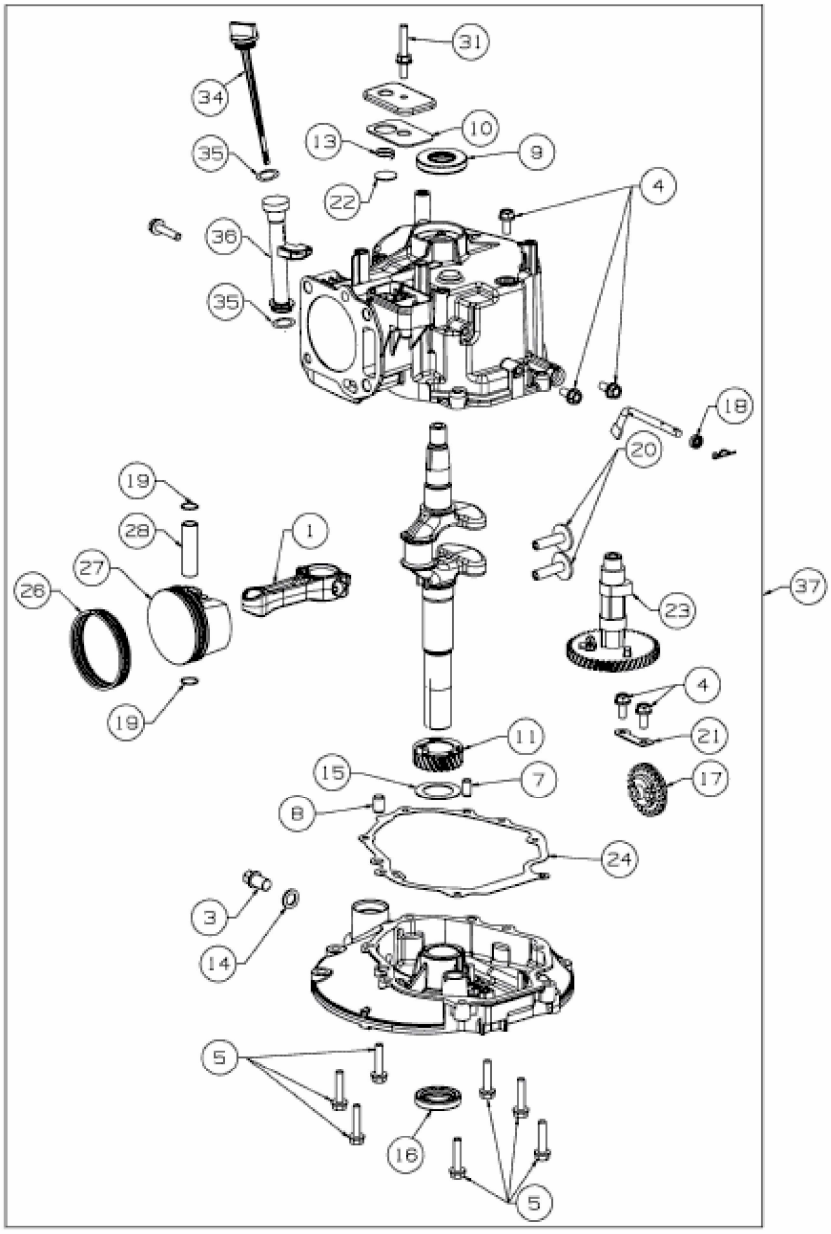

E3-08679A-02