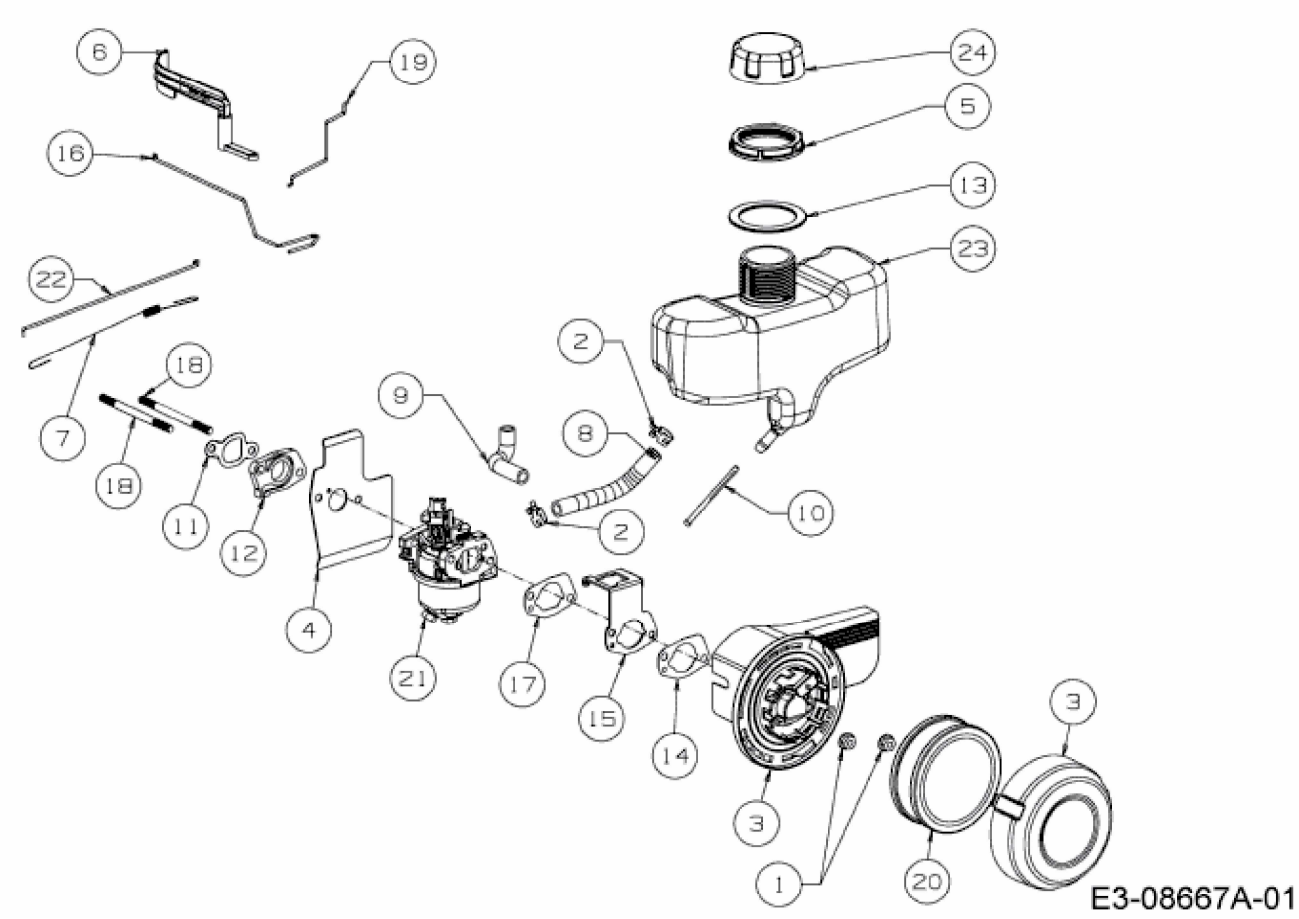5 T 65 RH > 752Z5T65RH (2015) > LUFTFILTER, TANK, VERGASER