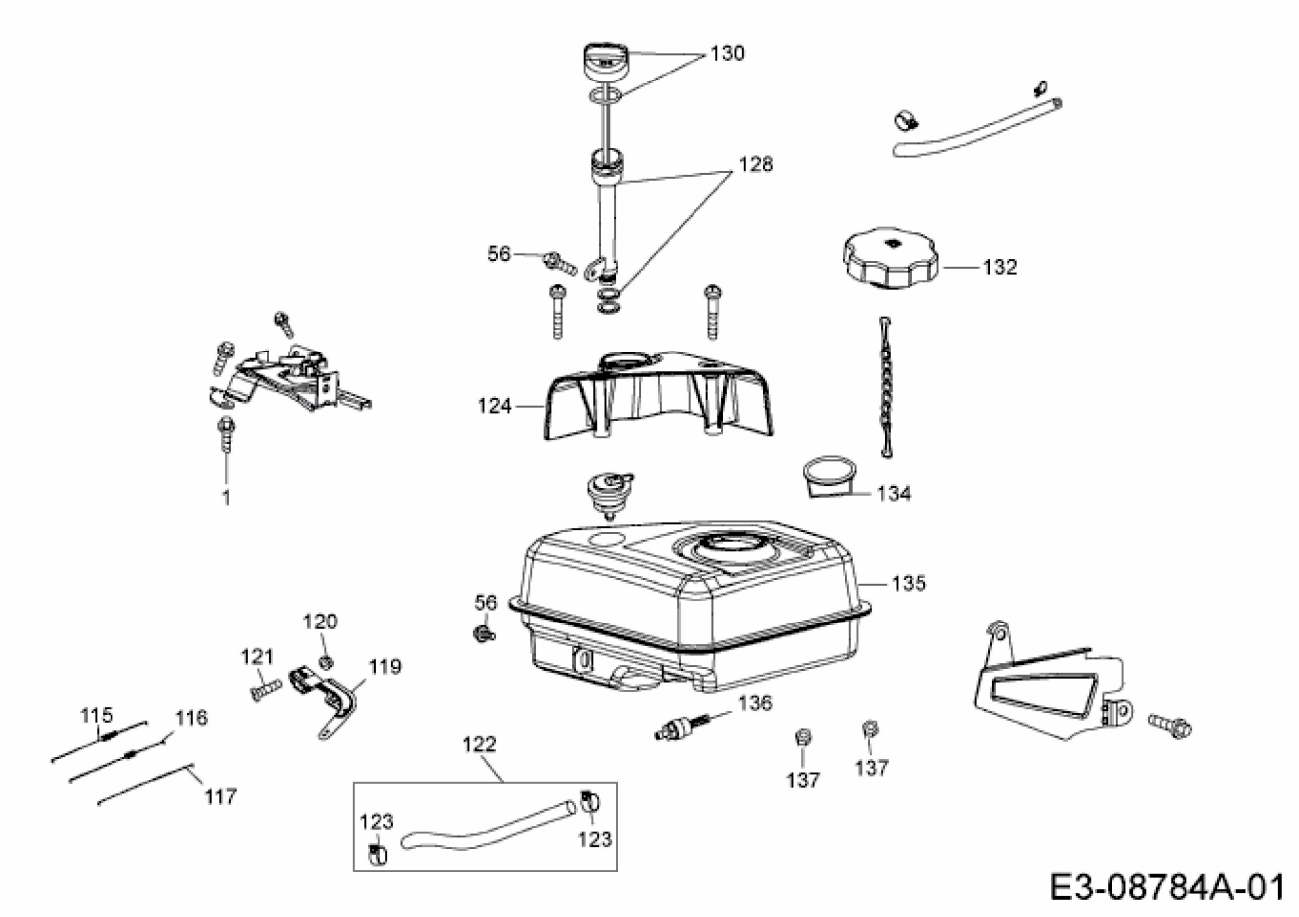170-DH > 752Z170-DH (2014) > ÖLMEßSTAB, TANK