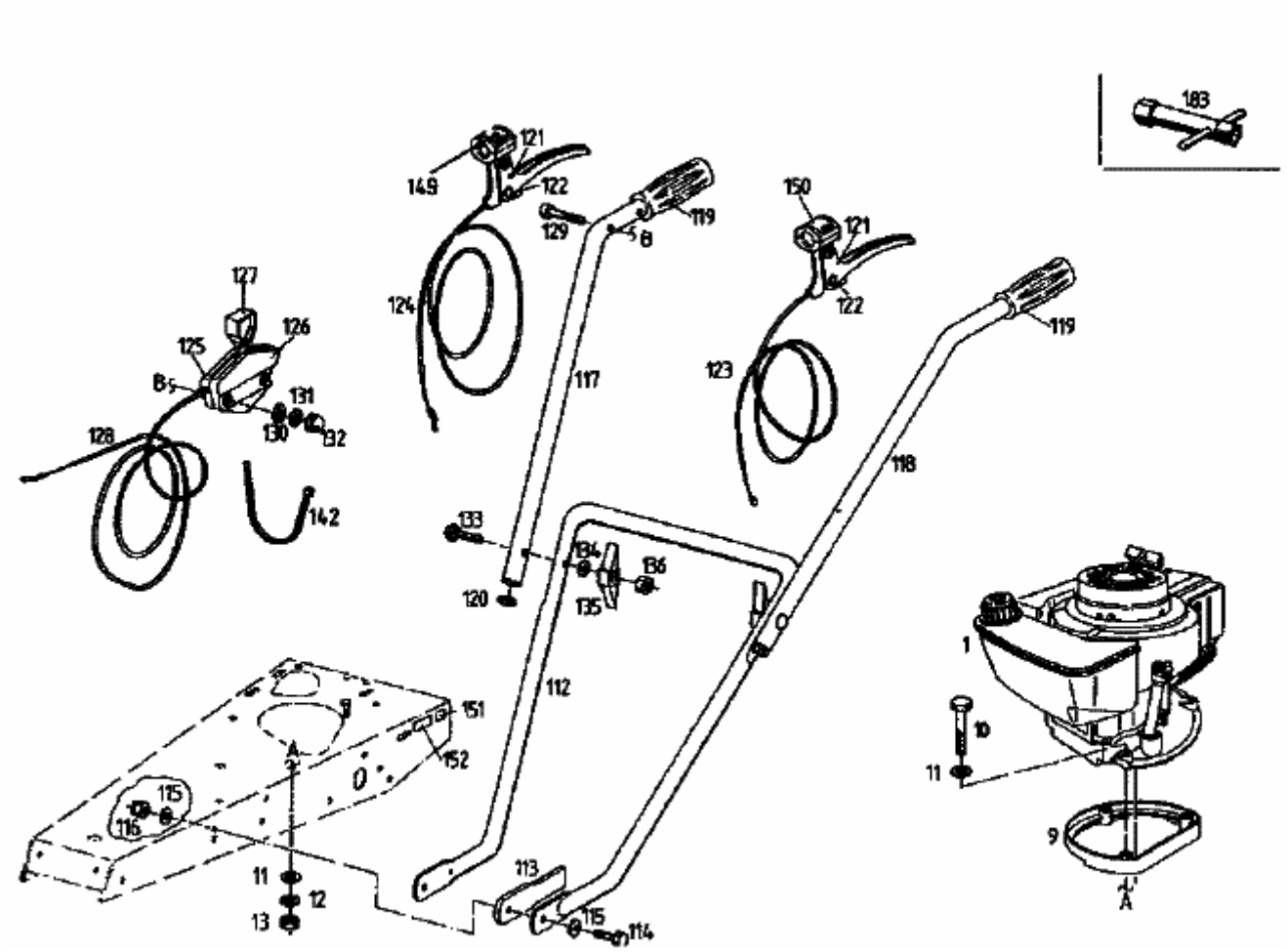370 BMR 4 > 07510.05 (1995) > HOLM