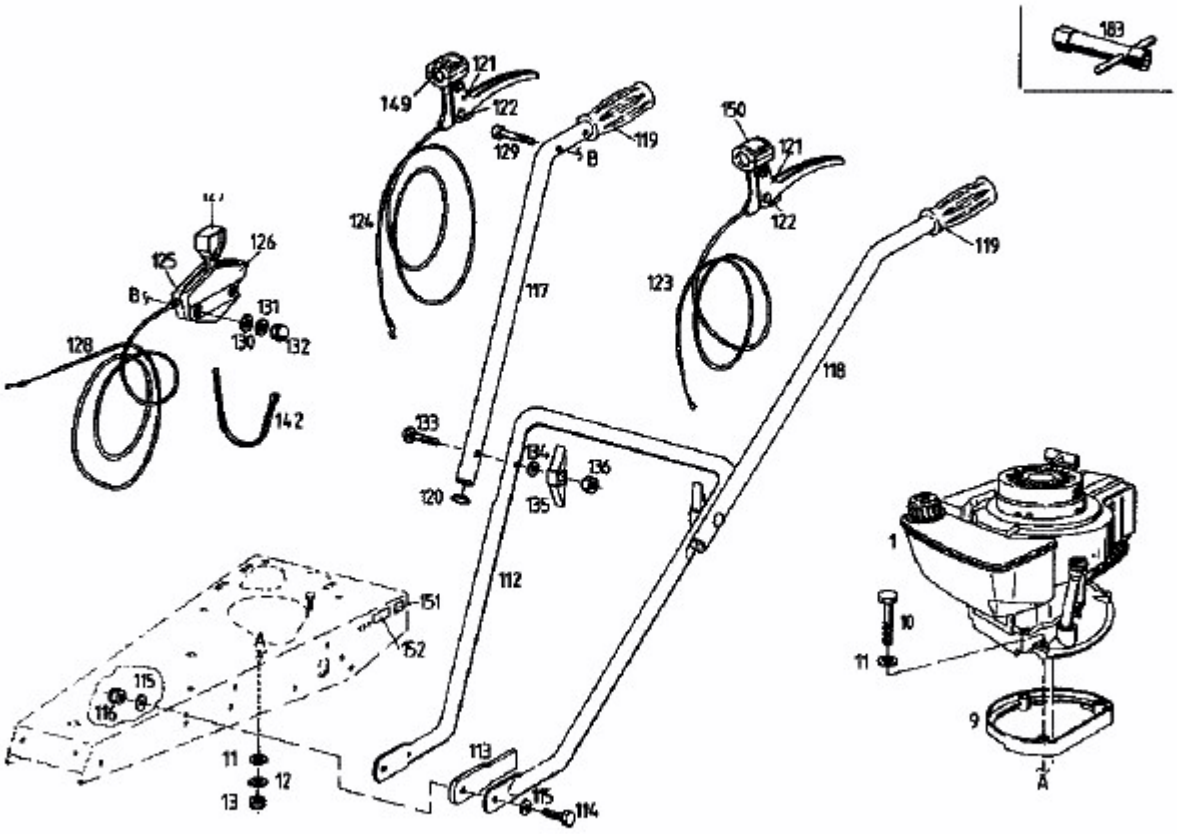BM 700 > 07510.04 (1995) > HOLM