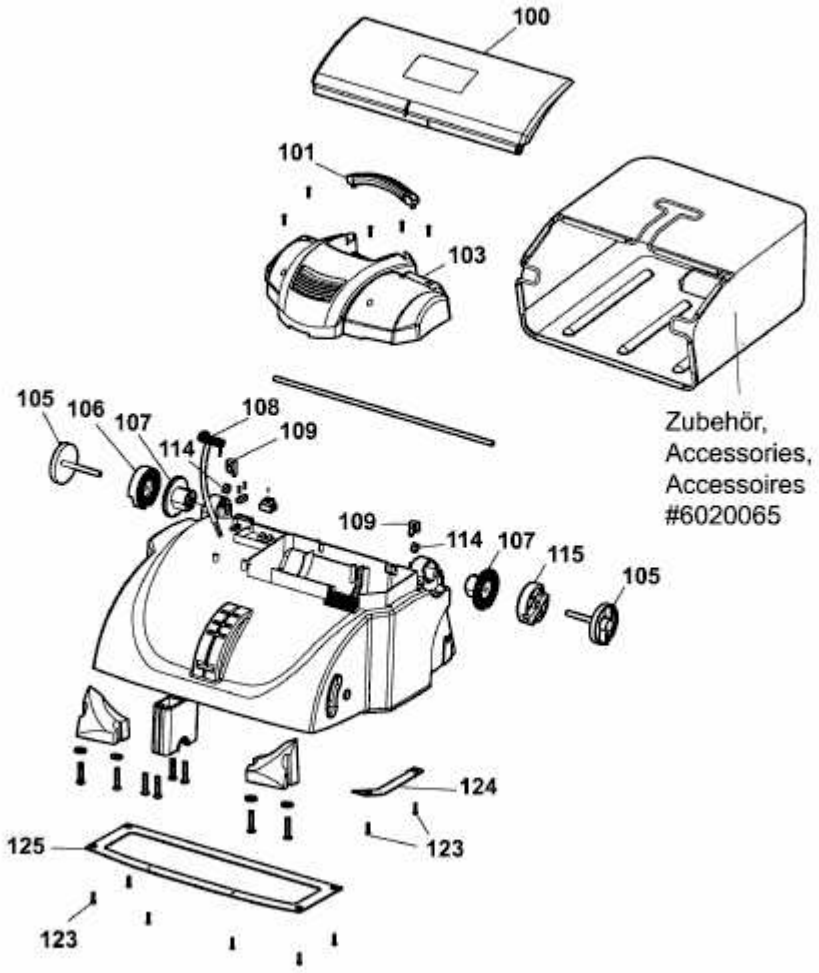
100
101
103
105
106
107
108
109
114
Zubehör,
Accessories,
Accessoires
#6020065
109
114
107
115
105
124
125
123
123

6020007A-1