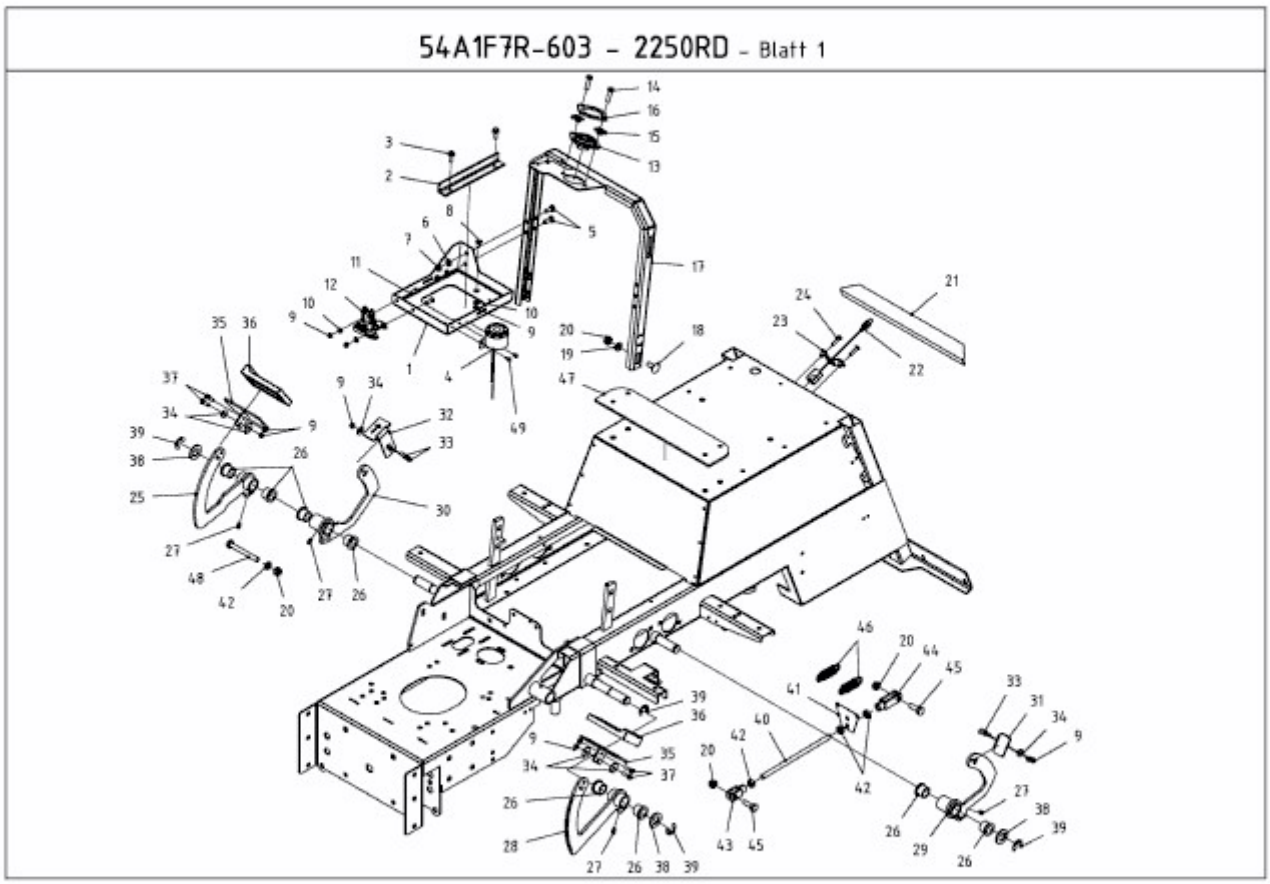54A1F7R-603 (2011) > PEDALE