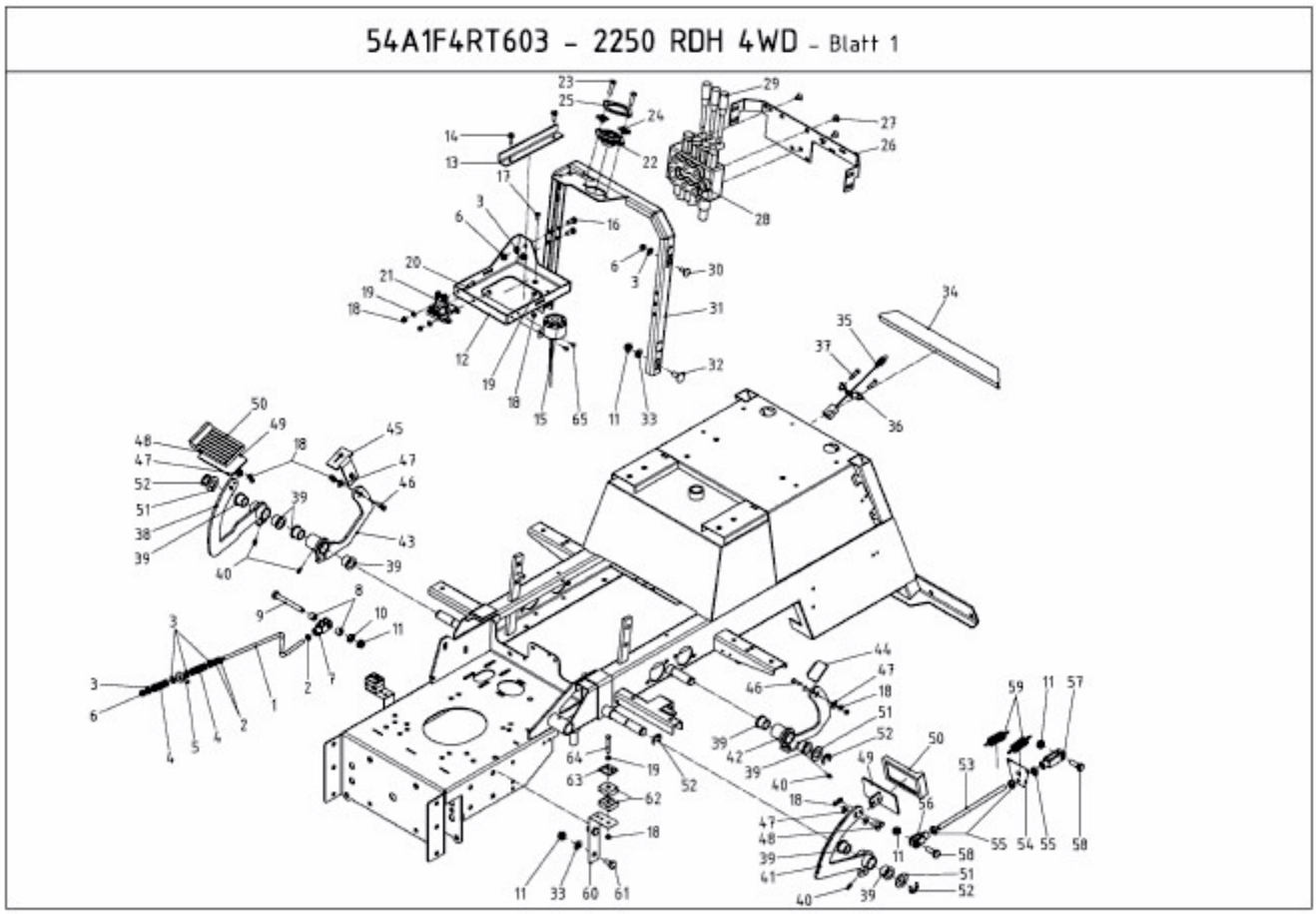54A1F4RT603 (2010) > PEDALE