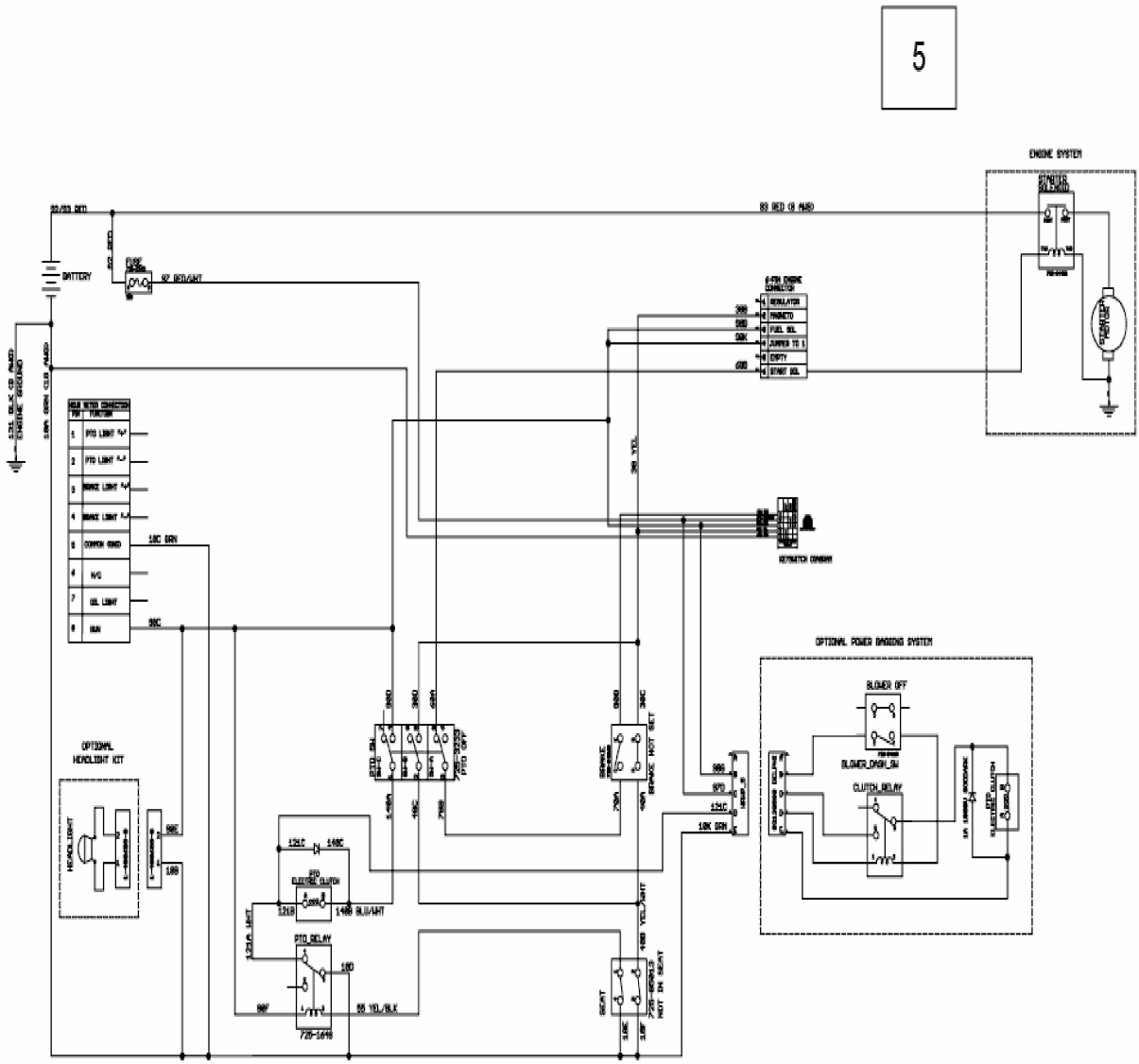
5
ENGINE SYSTEM
BATTERY
OPTIONAL HEADLIGHT KIT
OPTIONAL POWER BAGGING SYSTEM
BLOWER OFF
CLUTCH_DELAY
PTO ELECTRIC CLUTCH
PTO_DELAY
SEAT
IGNITION SOLENOID
KEYSWITCH CONNECT

E3-10477A-02