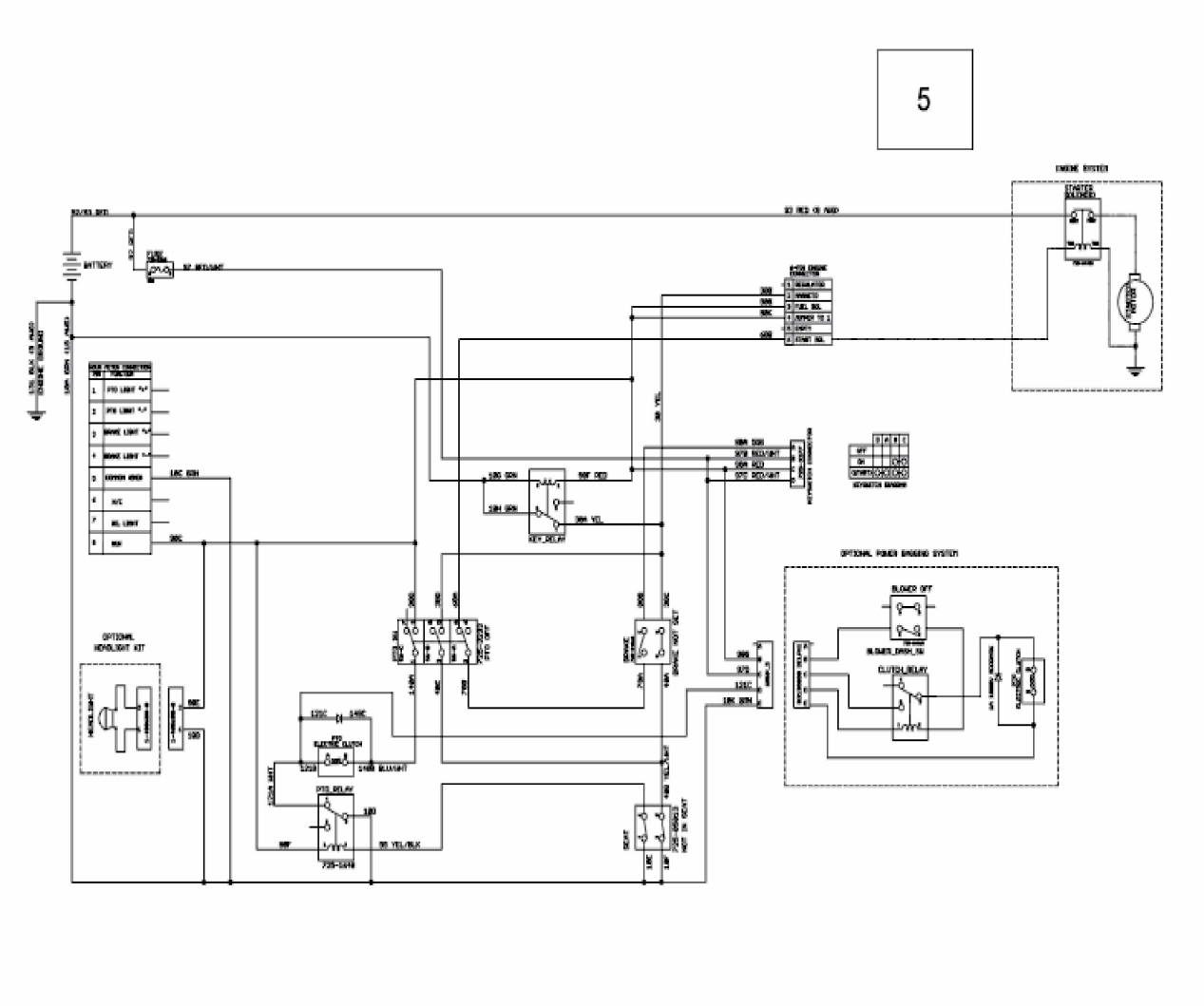
5
BATTERY
OPTIONAL HEADLIGHT KIT
OPTIONAL POWER BRAKING SYSTEM
BLOWER OFF
CLUTCH_RELAY
KEY_RELAY
PTO_RELAY
PTO ELECTRIC CLUTCH
STATOR
STARTER SOLENOID
E3-09831A-02