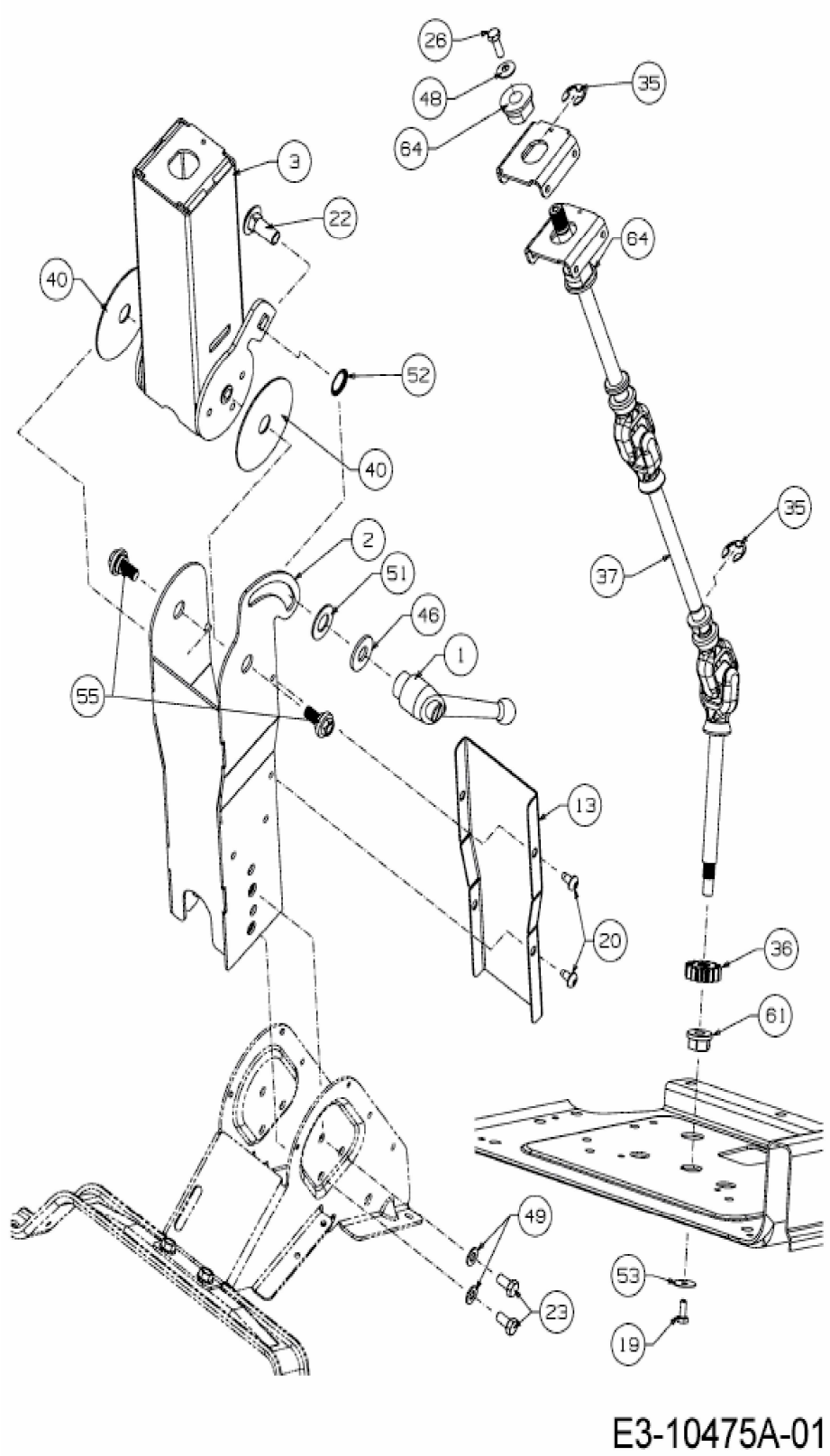
26
48
64
35
3
22
64
40
52
40
35
2
51
37
46
1
55
13
20
36
61
49
53
23
19
E3-10475A-01