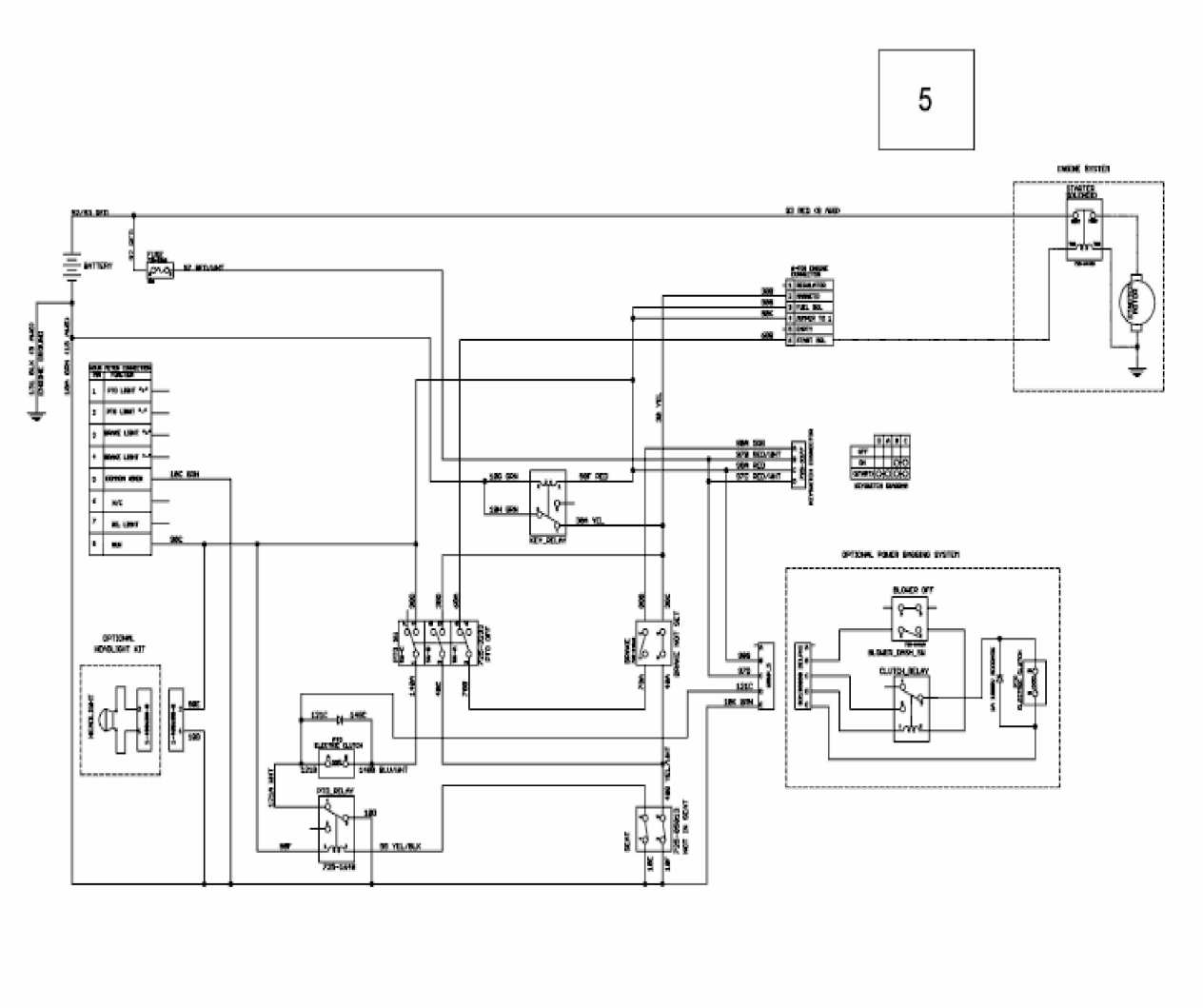
5
BATTERY
OPTIONAL HEADLIGHT KIT
OPTIONAL POWER BRAKING SYSTEM
BLOWER OFF
CLUTCH_RELAY
KEY_RELAY
PTO_RELAY
PTO ELECTRIC CLUTCH
ENGINE SYSTEM
STARTER SOLENOID
STARTER MOTOR

E3-09831A-02