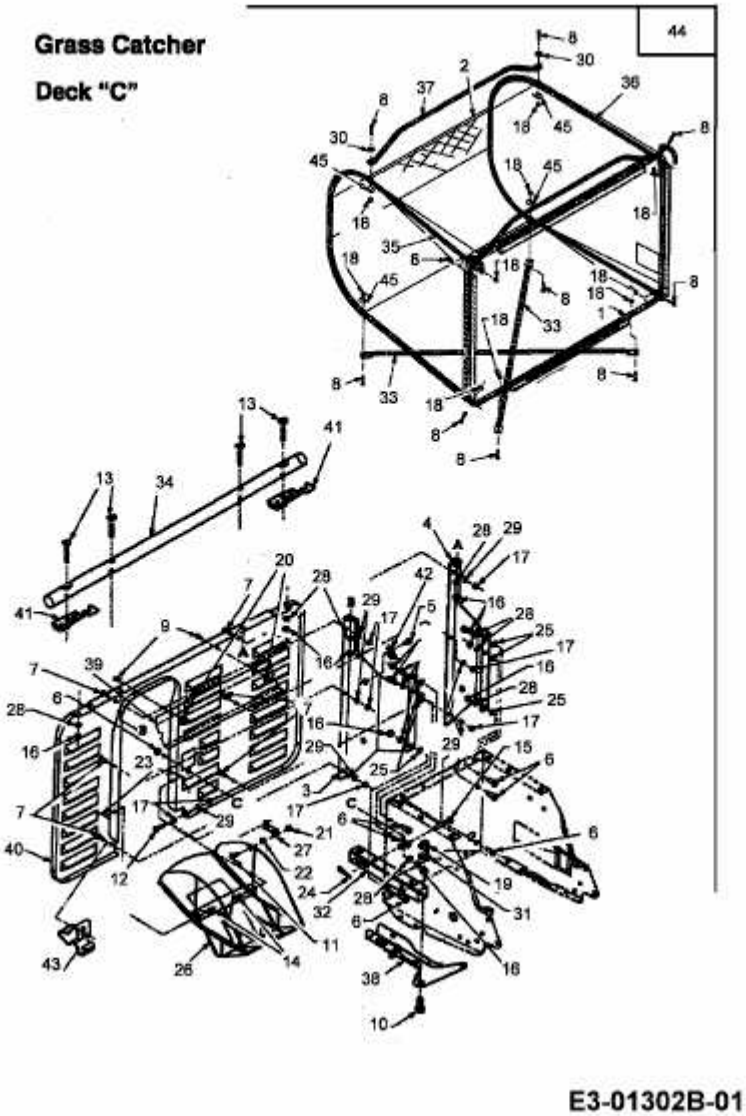SPRINT 1700 > 04207.02 (1996) > GRASFANGKORB