Twin Cylinder

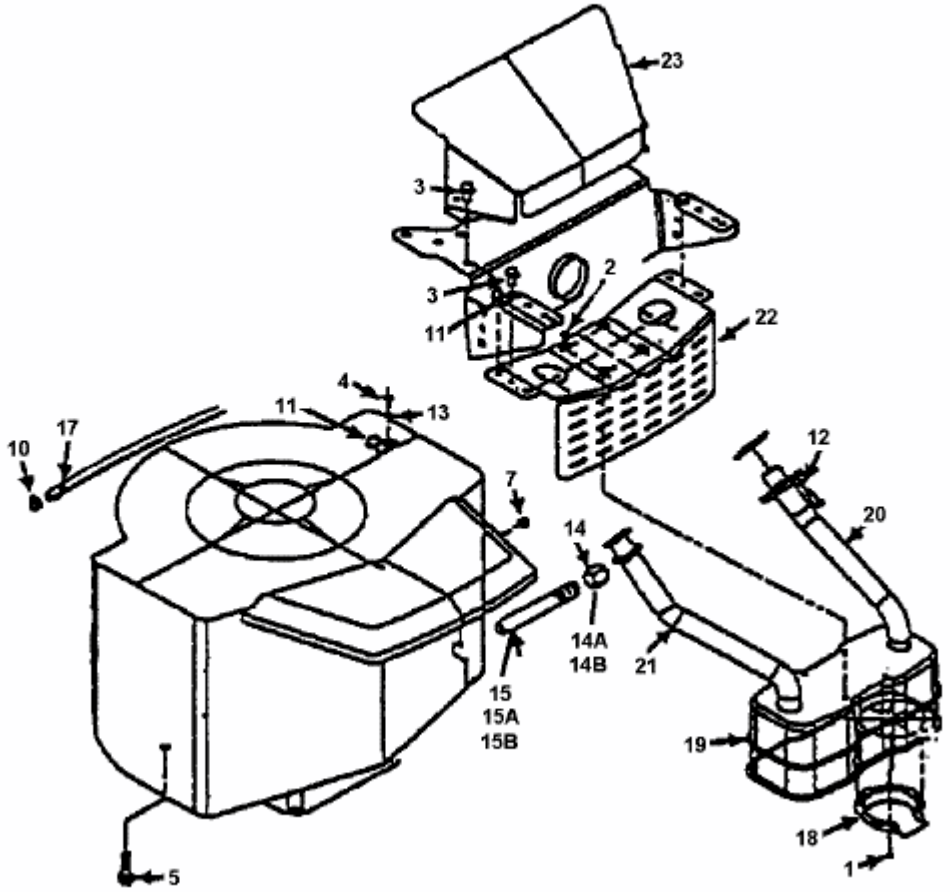

E4-00134A-01