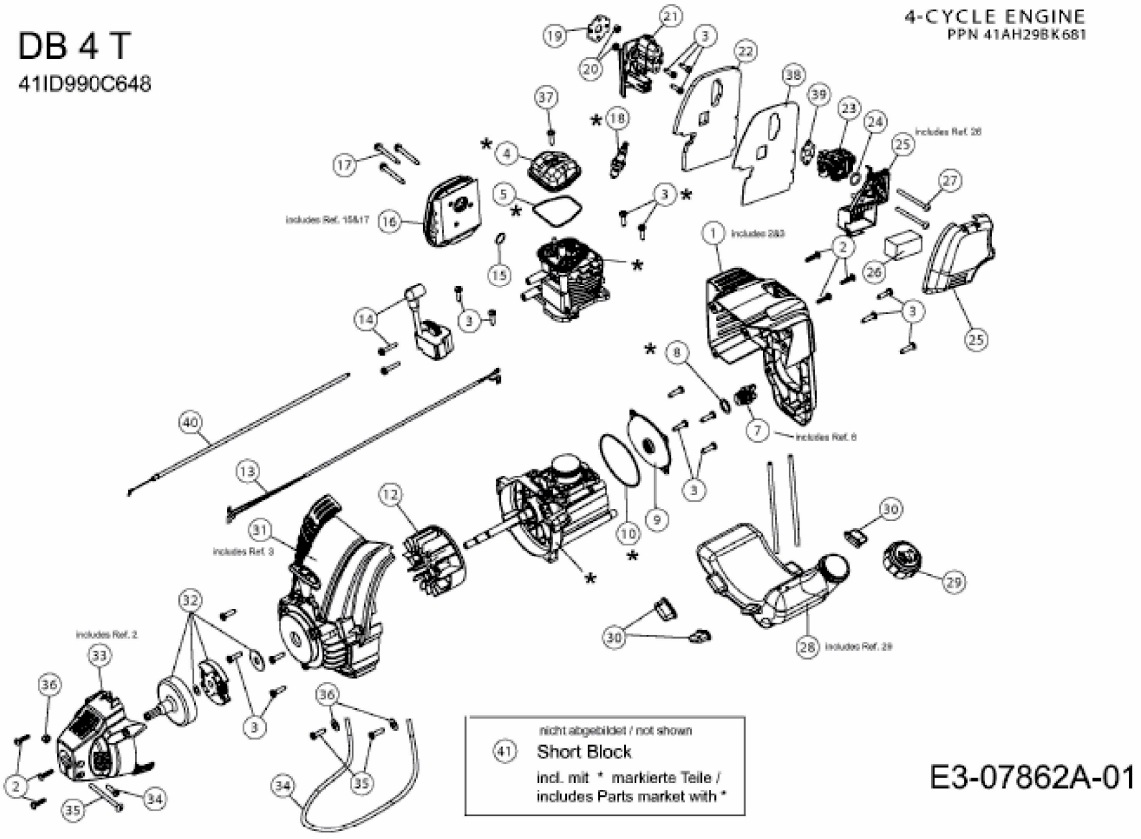DB 4 T > 41ID990C648 (2013) > MOTOR