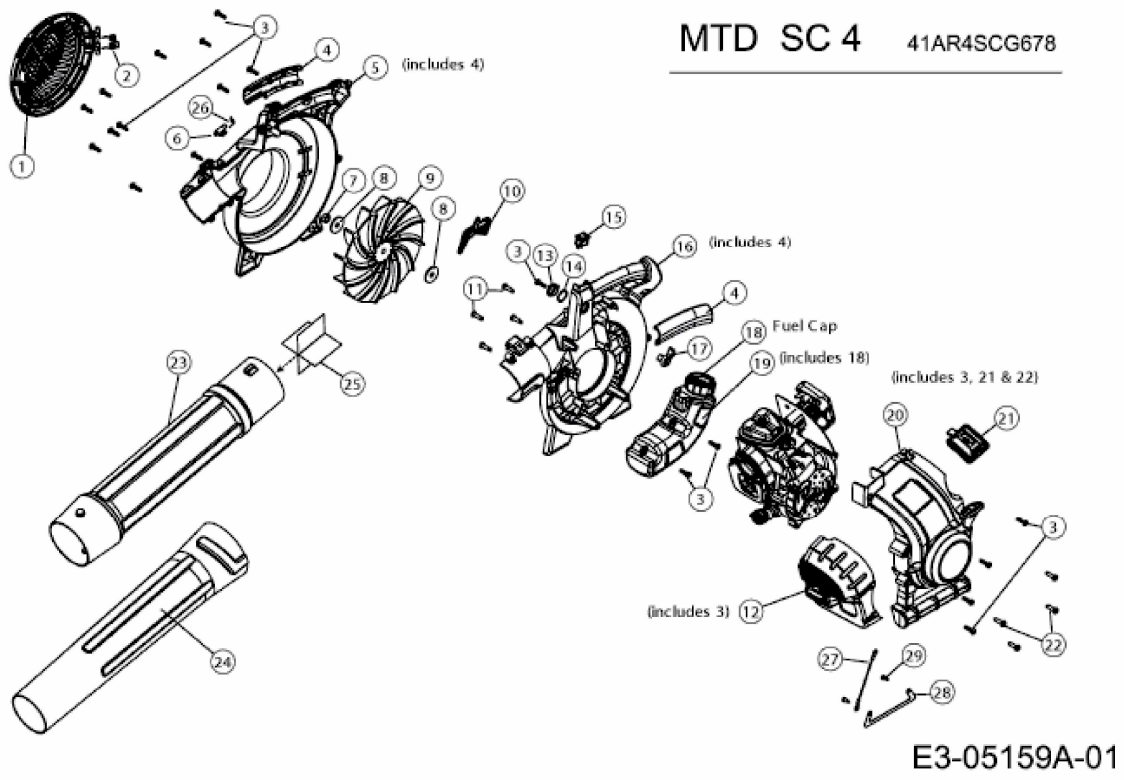
MTD SC 4
41AR4SCG678
(includes 4)
(includes 4)
Fuel Cap
(includes 18)
(includes 3, 21 & 22)
(includes 3)
E3-05159A-01