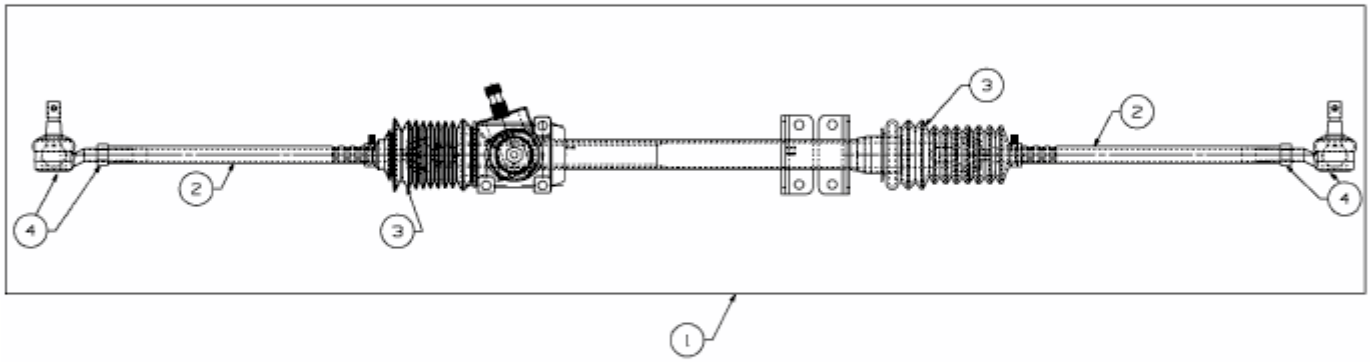


E3-03118B-02