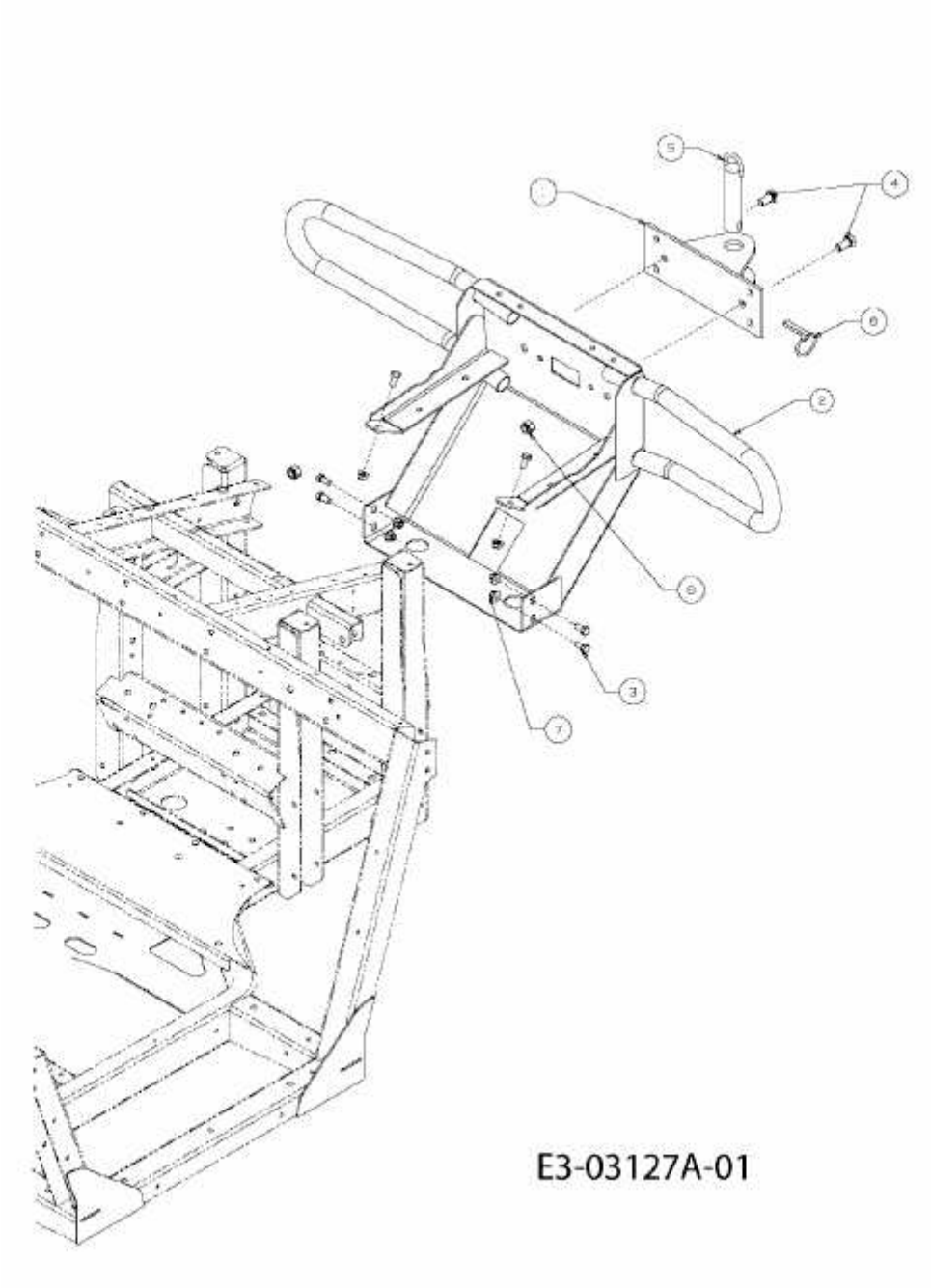MF 20 MD > 37AP468D695 (2007) > STOSSSTANGE