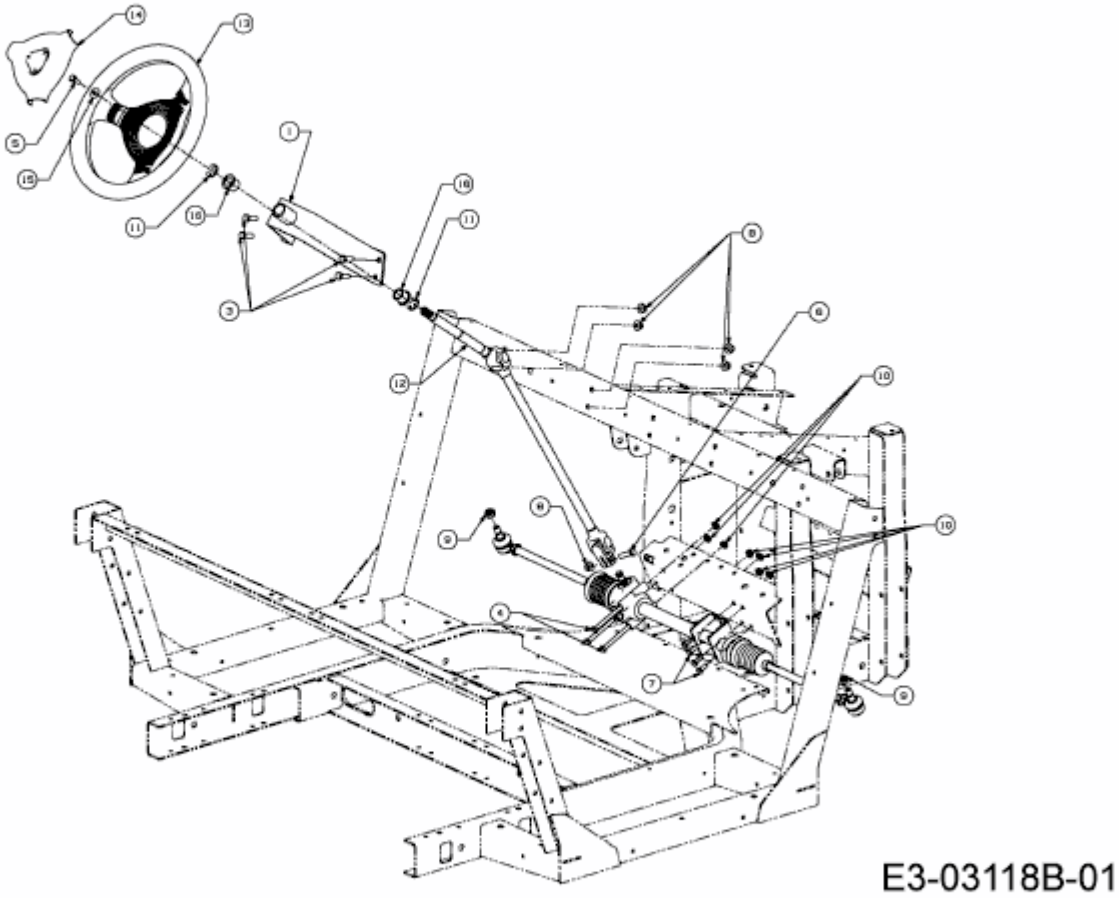
E3-03118B-01