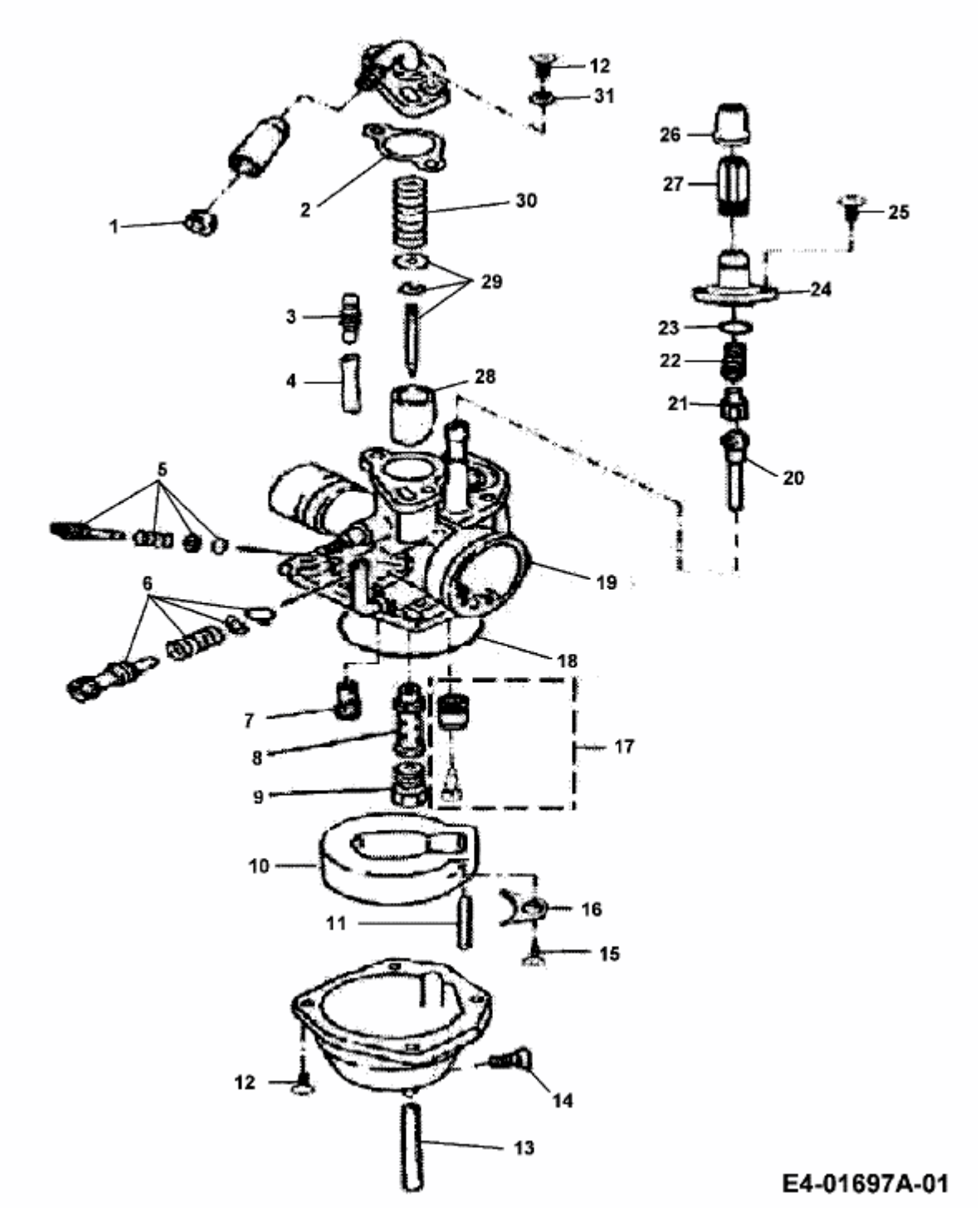SP 100 > 36AA113-603 (2006) > VERGASER