YM 8413 DE > 31AY9PKV643 (2008) > ABDECKUNG ARMATURENBRETT

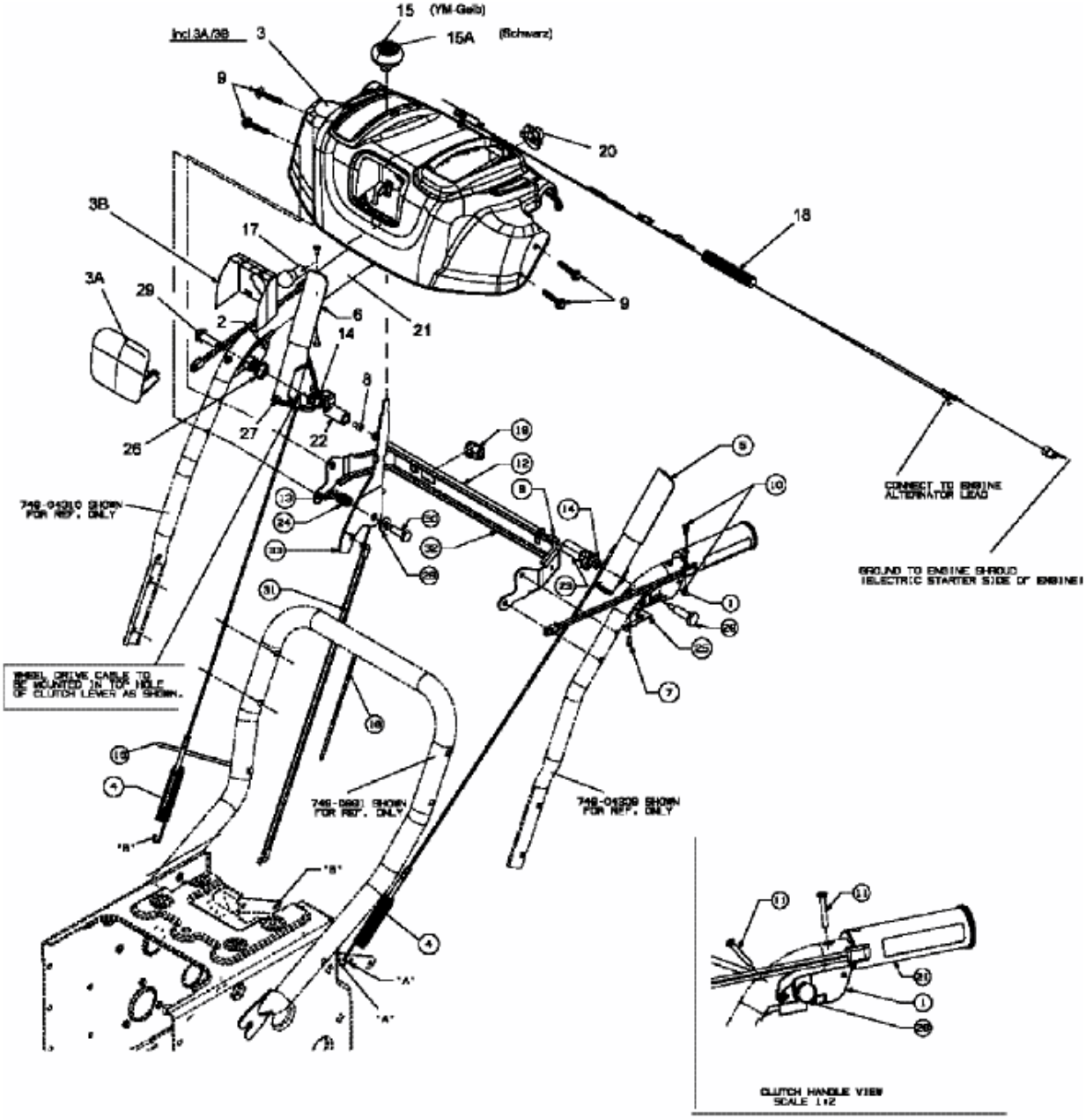

E4-01443B-01