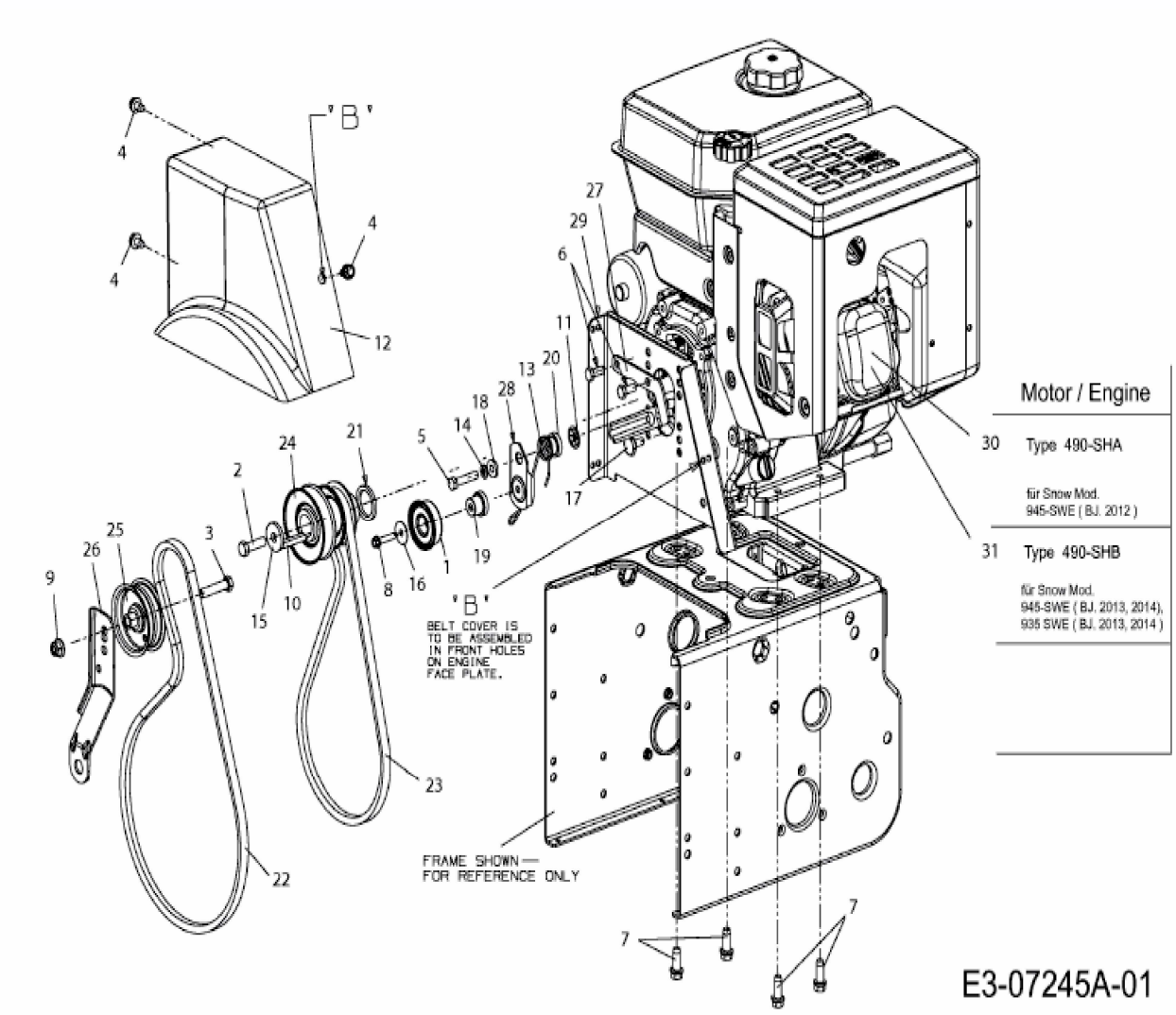
'B'
BELT COVER IS TO BE ASSEMBLED IN FRONT HOLES ON ENGINE FACE PLATE.
FRAME SHOWN — FOR REFERENCE ONLY
Motor / Engine
30 Type 490-SHA
für Snow Mod. 945-SWE (BJ. 2012)
31 Type 490-SHB
für Snow Mod. 945-SWE (BJ. 2013, 2014), 935 SWE (BJ. 2013, 2014)
E3-07245A-01