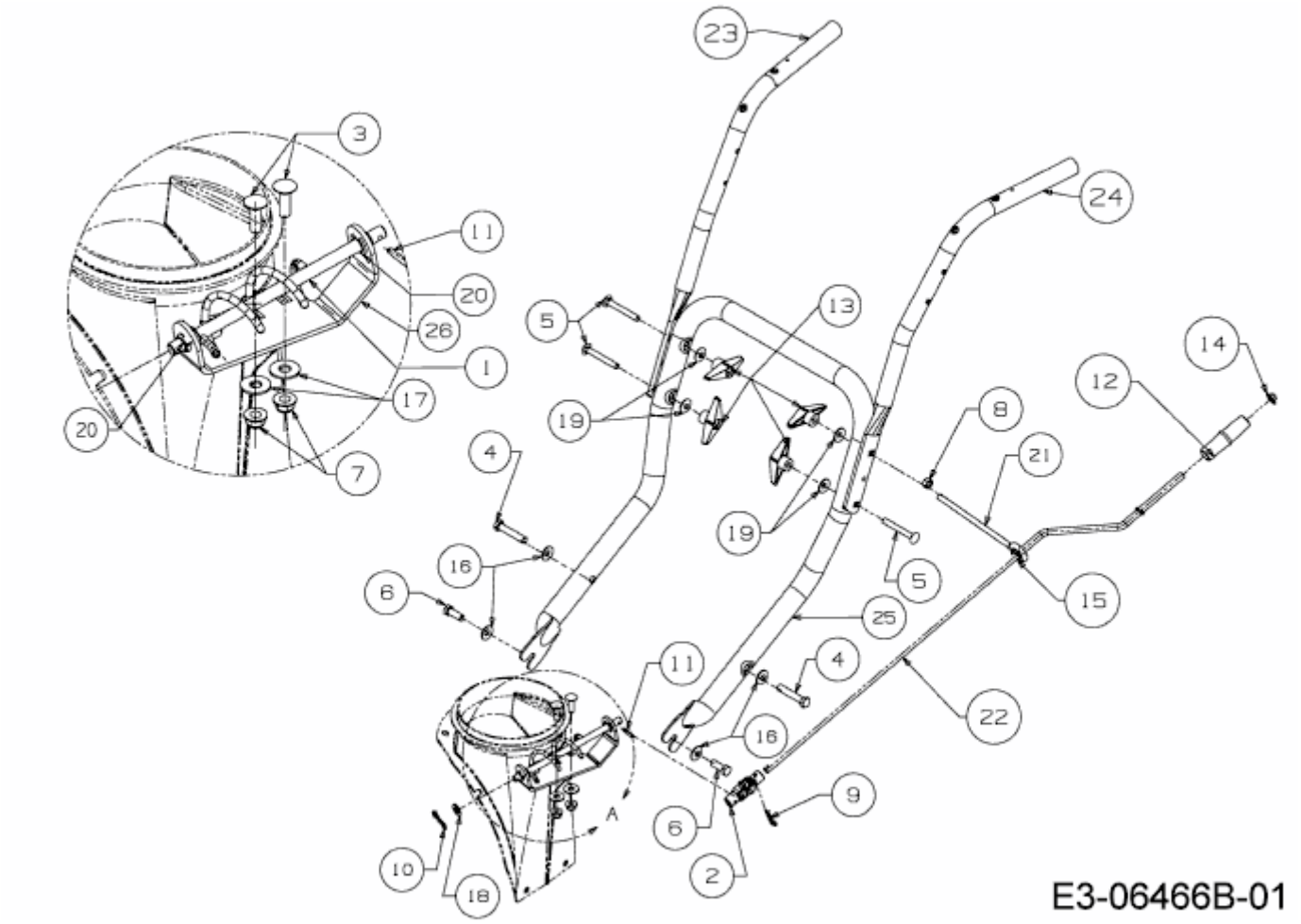EXPERT 84110 > 31AY95SV650 (2013) > HOLM, KURBEL