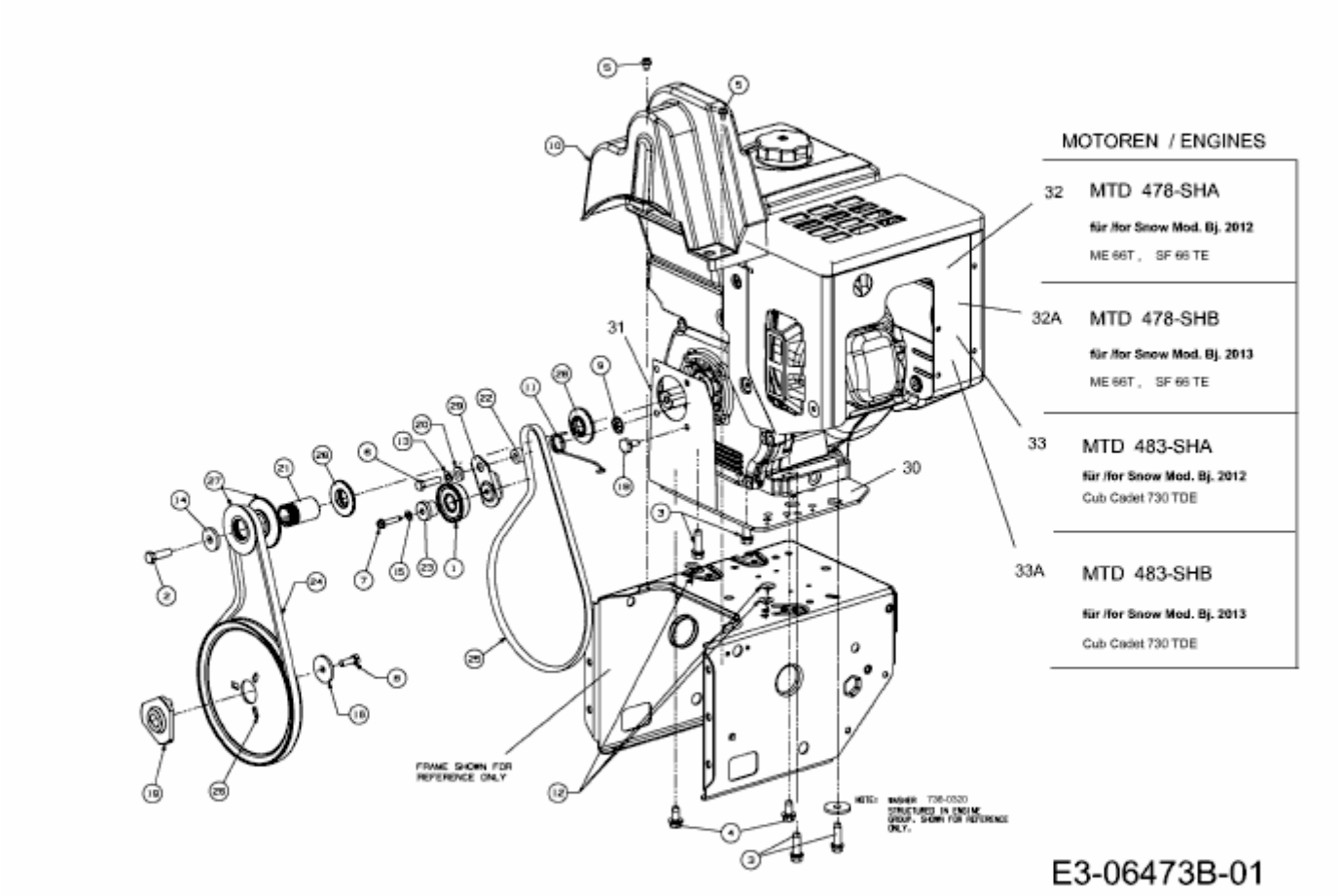AMBITION SF 66 TE > 31AY74S3650 (2013) > KEILRIEMEN, MOTOR, TANK