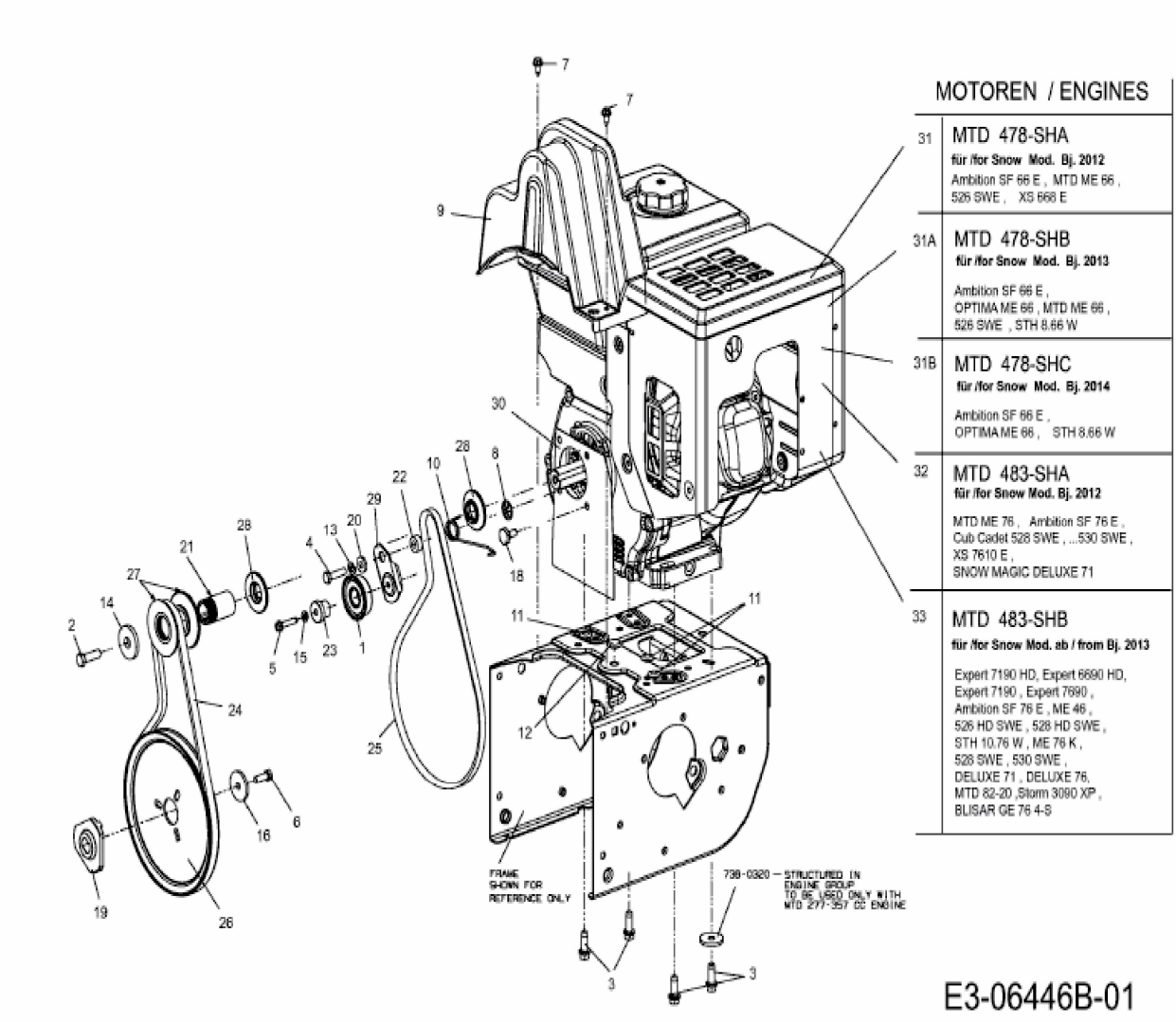
MOTOREN / ENGINES
31 MTD 478-SHA
für /for Snow Mod. Bj. 2012
Ambition SF 66 E , MTD ME 66 ,
526 SWE , XS 668 E
31A MTD 478-SHB
für /for Snow Mod. Bj. 2013
Ambition SF 66 E ,
OPTIMA ME 66 , MTD ME 66 ,
526 SWE , STH 8.66 W
31B MTD 478-SHC
für /for Snow Mod. Bj. 2014
Ambition SF 66 E ,
OPTIMA ME 66 , STH 8.66 W
32 MTD 483-SHA
für /for Snow Mod. Bj. 2012
MTD ME 76 , Ambition SF 76 E ,
Cub Cadet 528 SWE , ...530 SWE ,
XS 7610 E ,
SNOW MAGIC DELUXE 71
33 MTD 483-SHB
für /for Snow Mod. ab / from Bj. 2013
Expert 7190 HD, Expert 6690 HD,
Expert 7190 , Expert 7690 ,
Ambition SF 76 E , ME 46 ,
526 HD SWE , 528 HD SWE ,
STH 10.76 W , ME 76 K ,
528 SWE , 530 SWE ,
DELUXE 71 , DELUXE 76,
MTD 82-20 ,Storm 3090 XP ,
BLISAR GE 76 4-S
FRAME SHOWN FOR REFERENCE ONLY
738-0320 — STRUCTURED IN ENGINE GROUP TO BE USED ONLY WITH MTD 277-357 CC ENGINE
E3-06446B-01