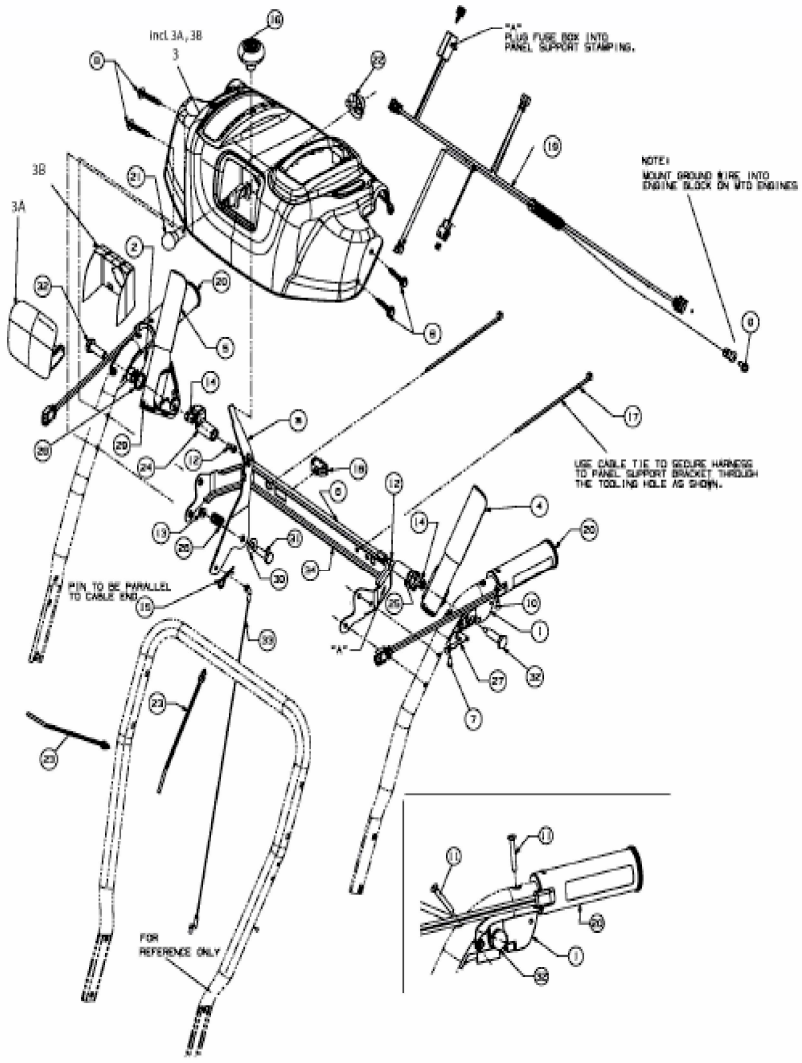
Incl 3A, 3B
3
3B
3A
"A"
PLUG FUSE BOX INTO
PANEL SUPPORT STAMPING.
NOTE:
MOUNT GROUND WIRE INTO
ENGINE BLOCK ON MTD ENGINES
USE CABLE TIE TO SECURE HARNESS
TO PANEL SUPPORT BRACKET THROUGH
THE TOOLING HOLE AS SHOWN.
PIN TO BE PARALLEL
TO CABLE END
"A"
FOR
REFERENCE ONLY

E3-07242A-01