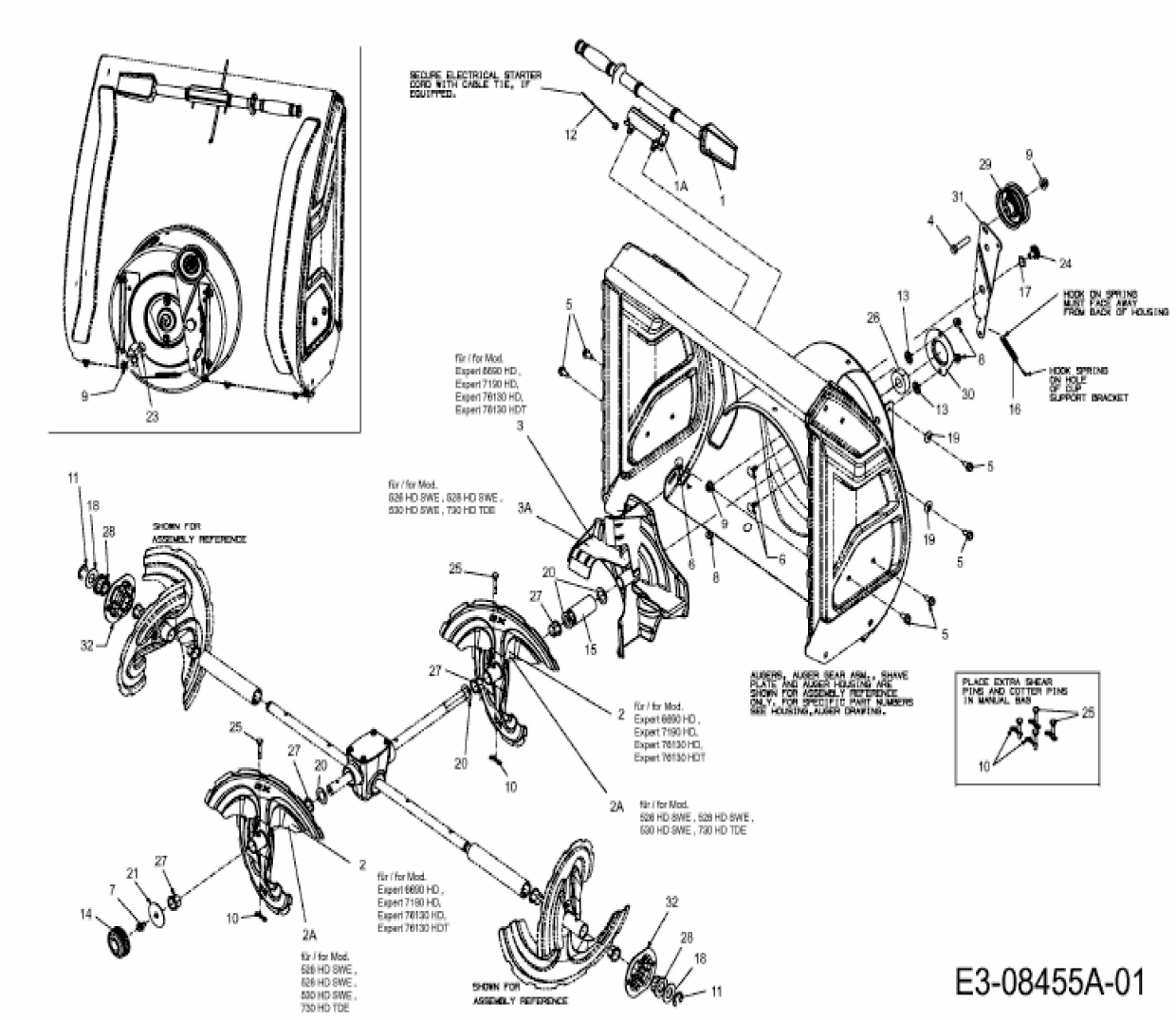
SECURE ELECTRICAL STARTER CORD WITH CABLE TIE, IF EQUIPPED.
HOOK ON SPRING MUST FACE AWAY FROM BACK OF HOUSING
HOOK SPRING ON HOLE OF CUP SUPPORT BRACKET
für / for Mod. Expert 6690 HD, Expert 7190 HD, Expert 76130 HD, Expert 76130 HDT
für / for Mod. 528 HD SWE, 528 HD SWE, 530 HD SWE, 730 HD TDE
SHOWN FOR ASSEMBLY REFERENCE
AUGERS, AUGER GEAR ASM., SHAVE PLATE AND AUGER HOUSING ARE SHOWN FOR ASSEMBLY REFERENCE ONLY. FOR SPECIFIC PART NUMBERS SEE HOUSING, AUGER DRAWING.
PLACE EXTRA SHEAR PINS AND COTTER PINS IN MANUAL BAG
E3-08455A-01