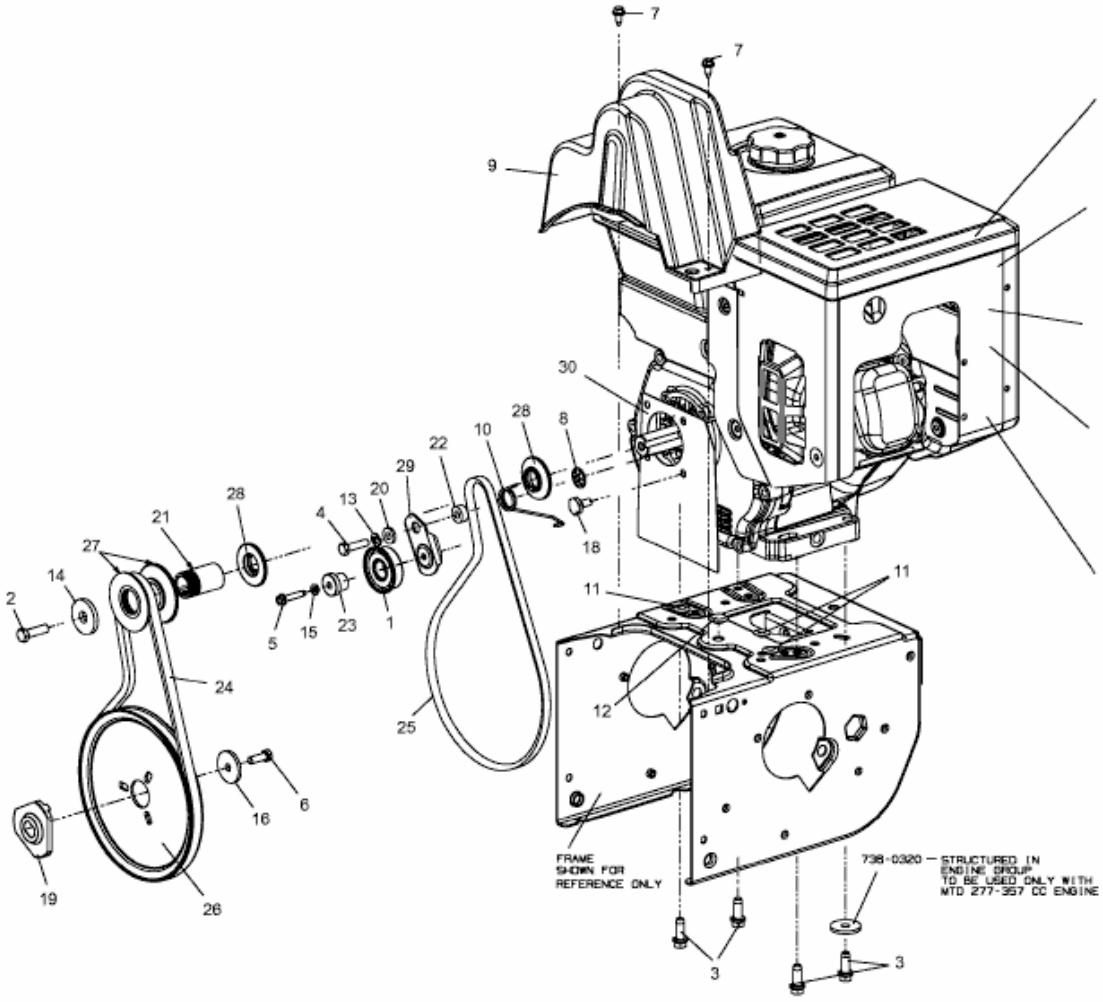

MOTOREN / ENGINES

31	**MTD 478-SHA** **für /for Snow Mod. Bj. 2012** Ambition SF 66 E , MTD ME 66 , 526 SWE , XS 668 E
31A	**MTD 478-SHB** **für /for Snow Mod. Bj. 2013** Ambition SF 66 E , OPTIMA ME 66 , MTD ME 66 , 526 SWE , STH 8.66 W
31B	**MTD 478-SHC** **für /for Snow Mod. Bj. 2014** Ambition SF 66 E , OPTIMA ME 66 , STH 8.66 W
32	**MTD 483-SHA** **für /for Snow Mod. Bj. 2012** MTD ME 76 , Ambition SF 76 E , Cub Cadet 528 SWE , ...530 SWE , XS 7610 E , SNOW MAGIC DELUXE 71
33	**MTD 483-SHB** **für /for Snow Mod. ab / from Bj. 2013** Expert 7190 HD, Expert 6690 HD, Expert 7190 , Expert 7690 , Ambition SF 76 E , ME 46 , 526 HD SWE , 528 HD SWE , STH 10.76 W , ME 76 K , 528 SWE , 530 SWE , DELUXE 71 , DELUXE 76, MTD 82-20 ,Storm 3090 XP , BLISAR GE 76 4-S

E3-06446B-01