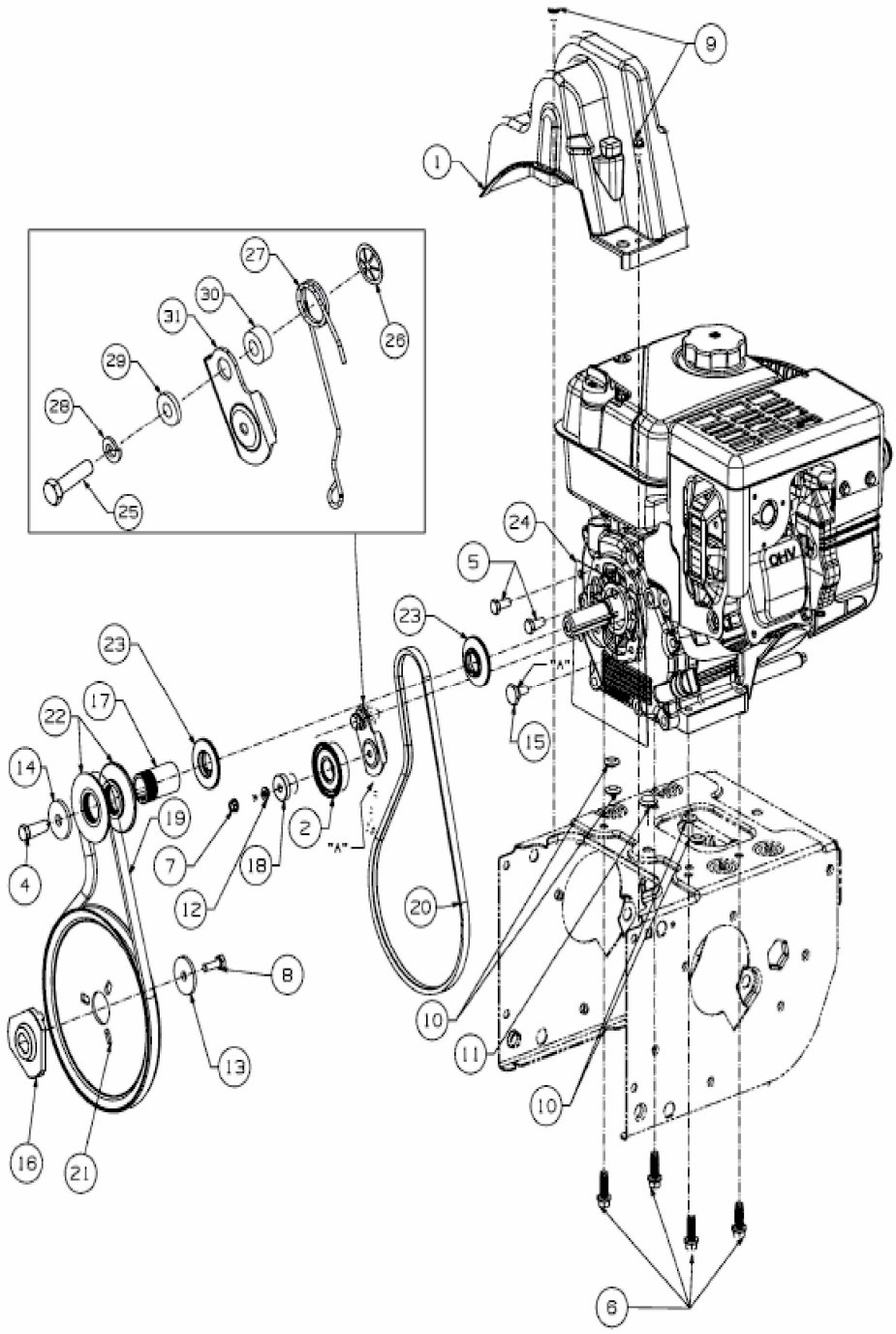
9
1
27
30
31
26
29
28
25
24
5
23
23
"A"
15
22
17
14
19
2
"A"
7
18
4
12
20
8
10
11
13
10
16
21
6

E3-10299B-01