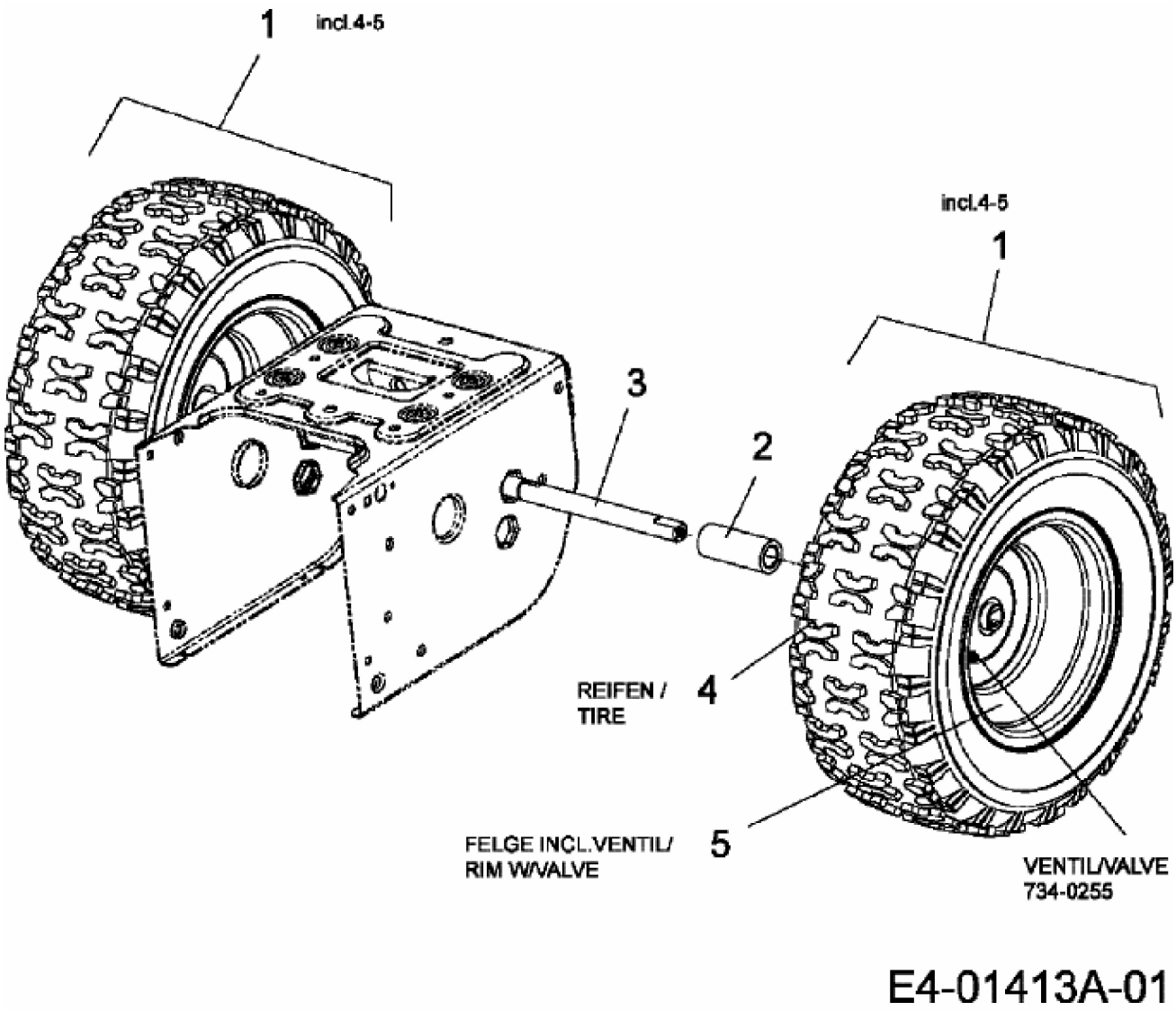
1
incl.4-5
incl.4-5
1
3
2
REIFEN /
TIRE
4
FELGE INCL.VENTIL/
RIM W/VALVE
5
VENTIL/VALVE
734-0255
E4-01413A-01