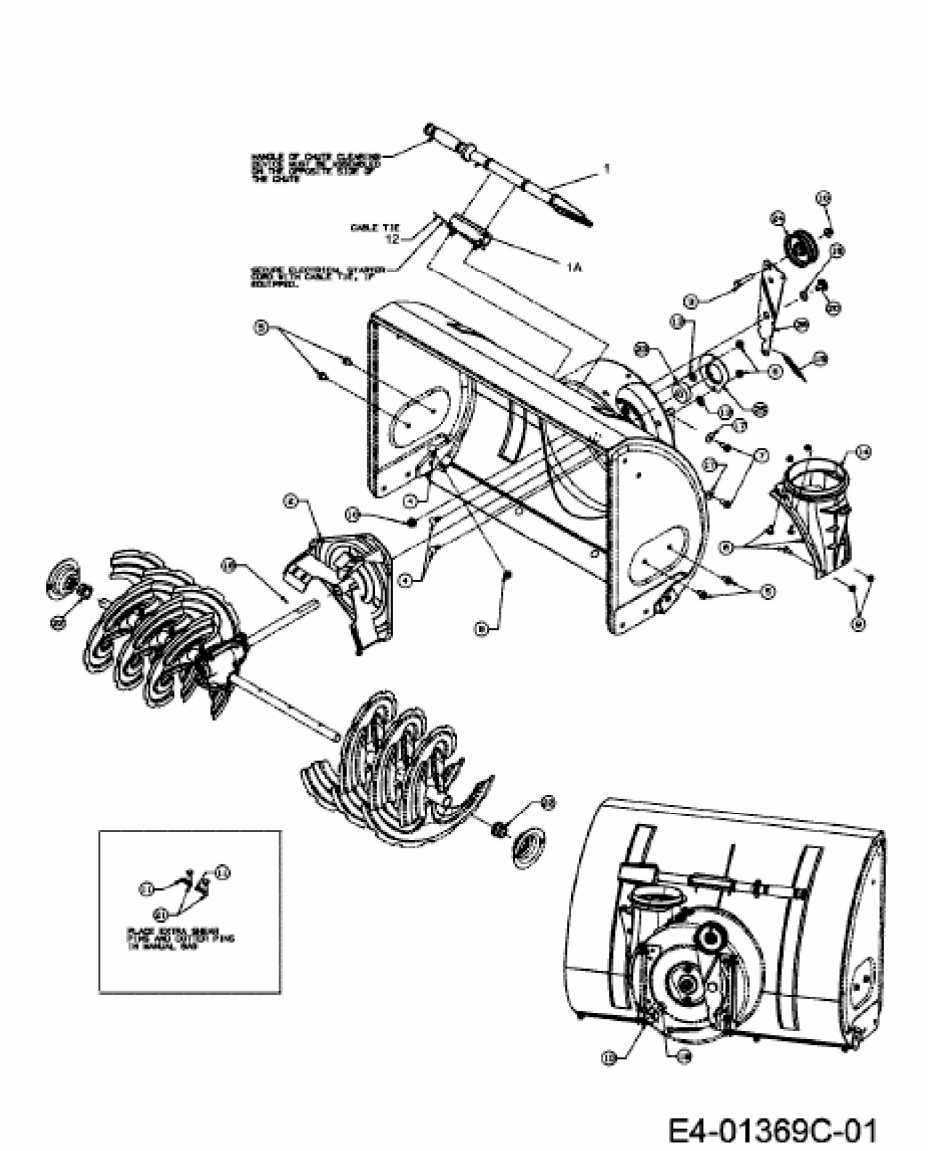E 660 G > 31AV6ZHG678 (2009) > SCHAUFELRAD