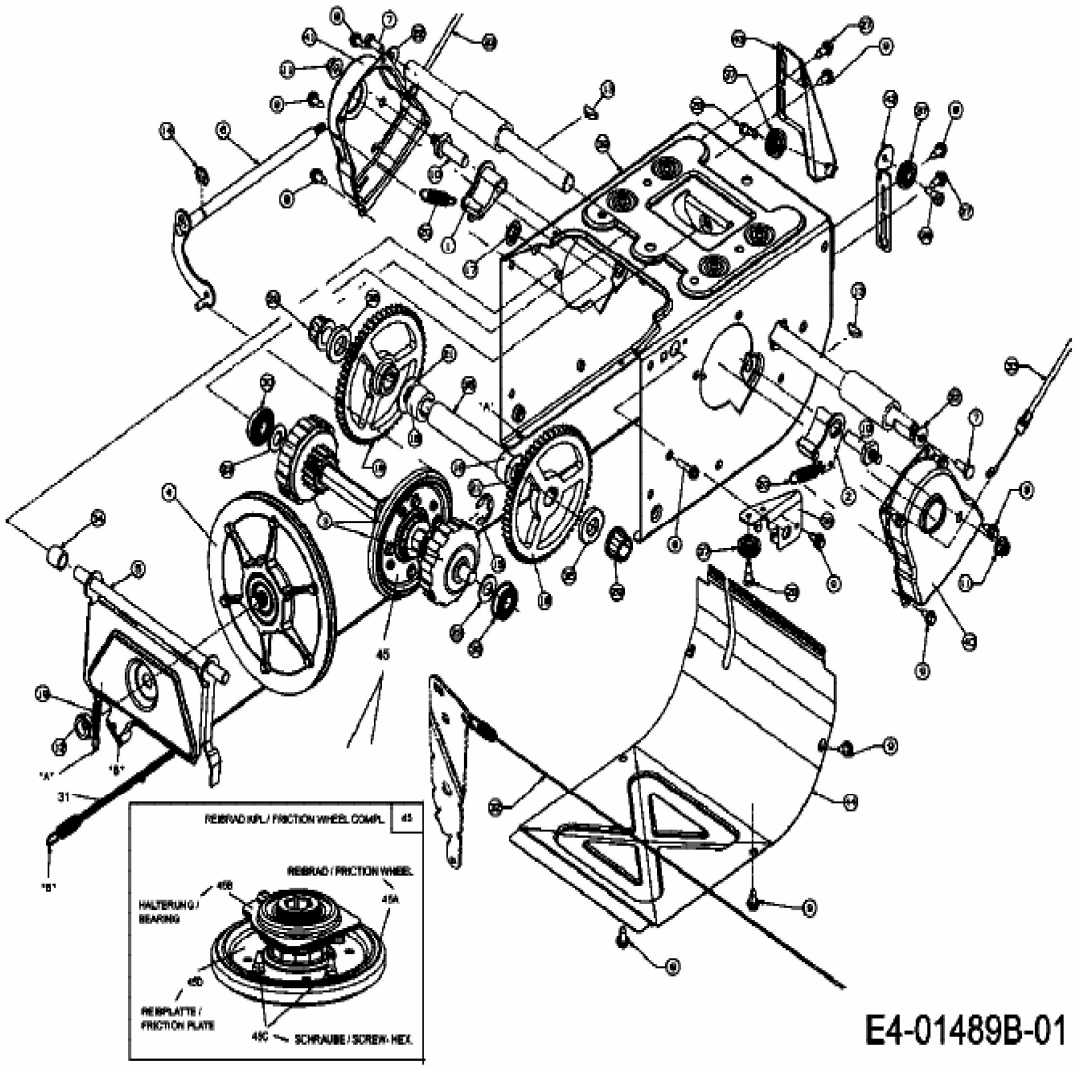
REIBRAD KPL / FRICTION WHEEL COMPL.
45
REIBRAD / FRICTION WHEEL
45A
45B
HALTERUNG / BEARING
45D
REIBPLATTE / FRICTION PLATE
45C
SCHRAUBE / SCREW-HEX.
45
31
"A"
"B"
E4-01489B-01