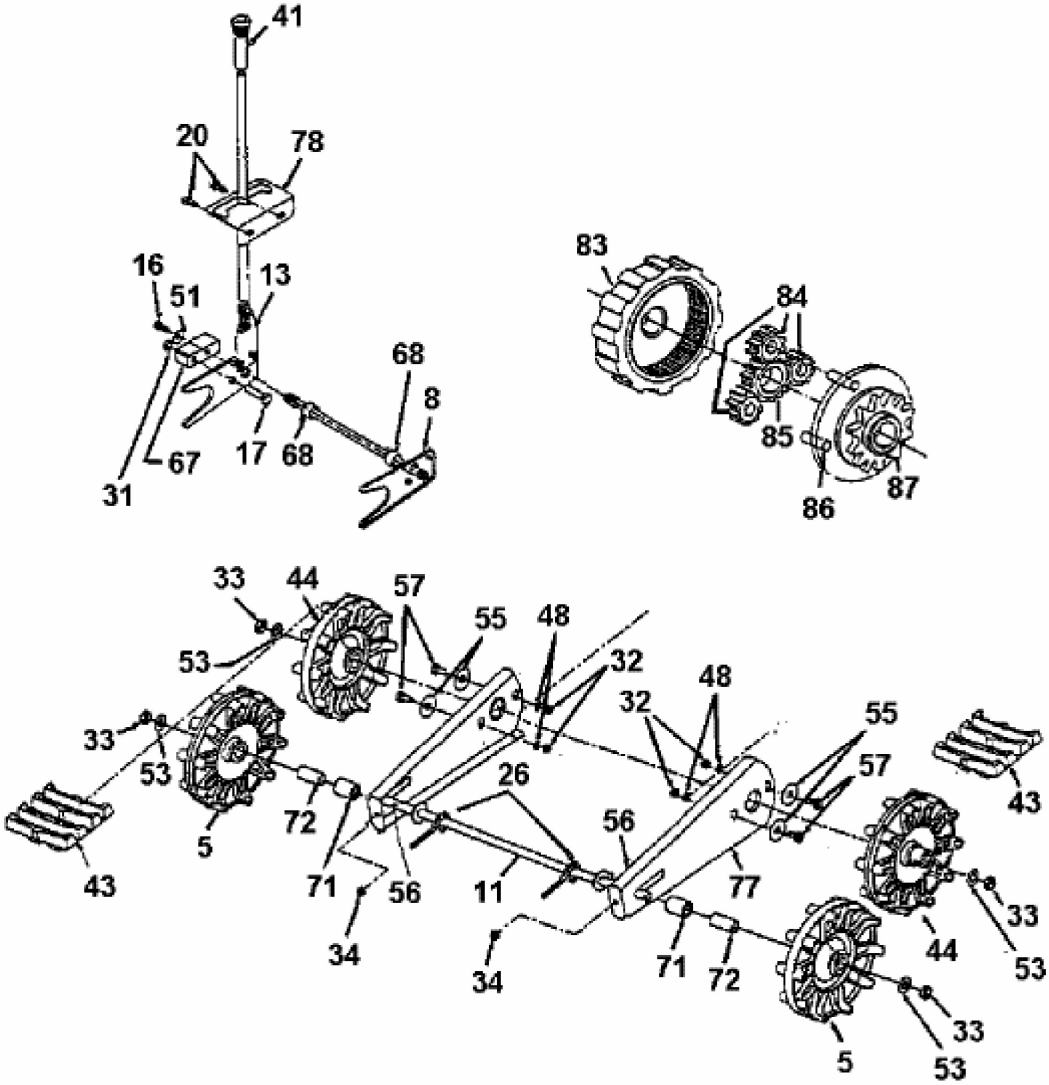


fsg

E4-00307A-02