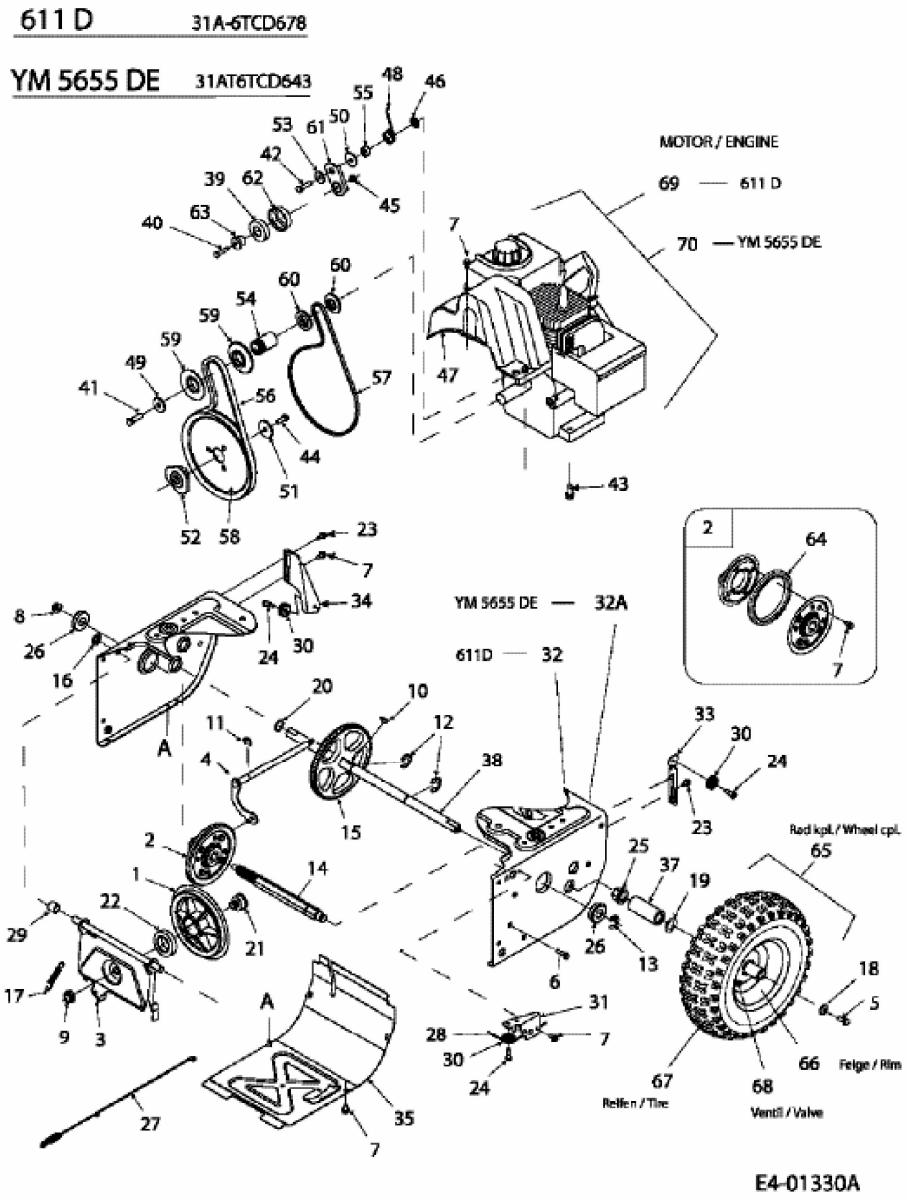
611 D 31A-6TCD678
YM 5655 DE 31AT6TCD643
MOTOR / ENGINE
69 — 611 D
70 — YM 5655 DE
YM 5655 DE — 32A
611D — 32
Rad kpl. / Wheel cpl.
Felge / Rim
Reifen / Tire
Ventil / Valve
E4-01330A