YM 5355 S > 31A-2T5-643 (2006) > FRÄSANTRIEB
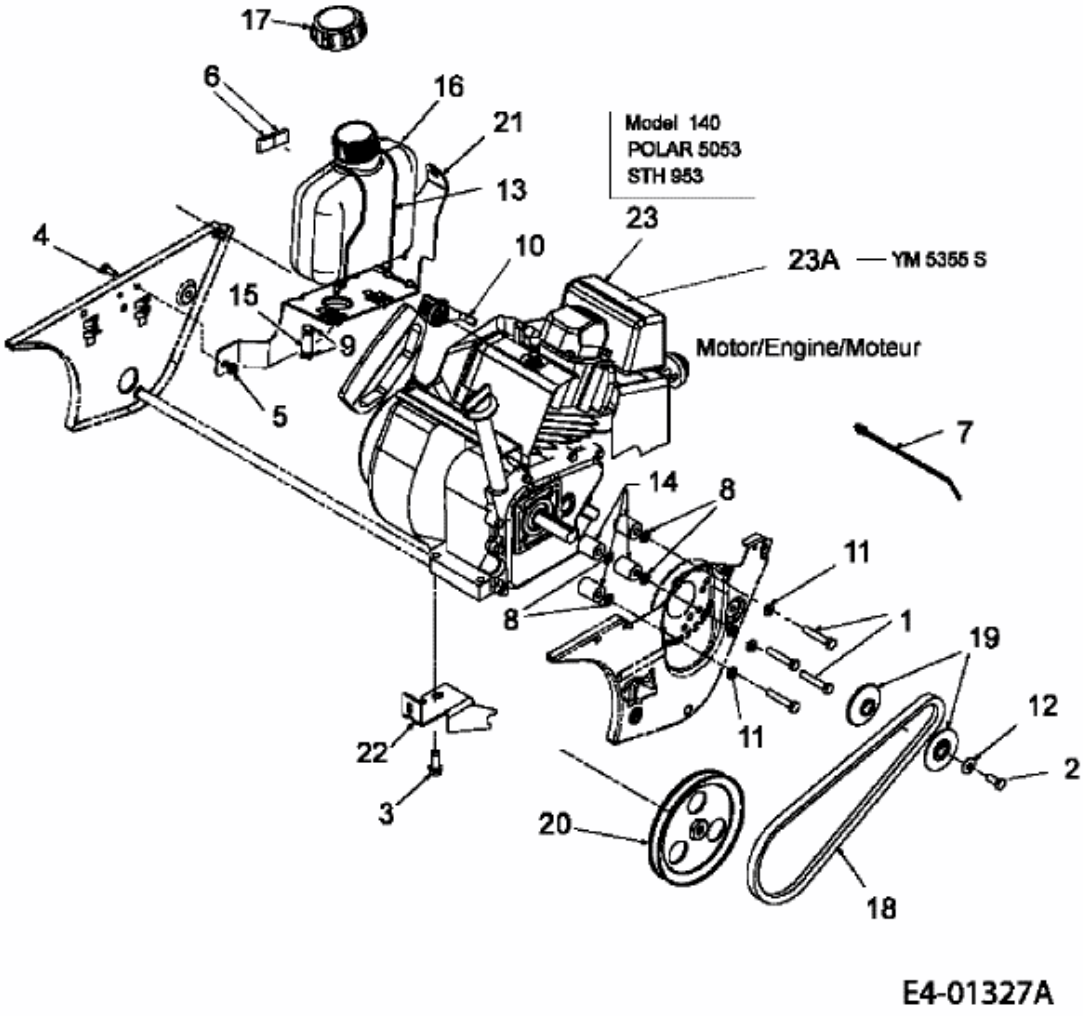
Model 140	31A-2R0-678
POLAR 5053	31A-2R0-609
STH 953	31A-2R5-614
YM 5355 S	31A-2T5-643