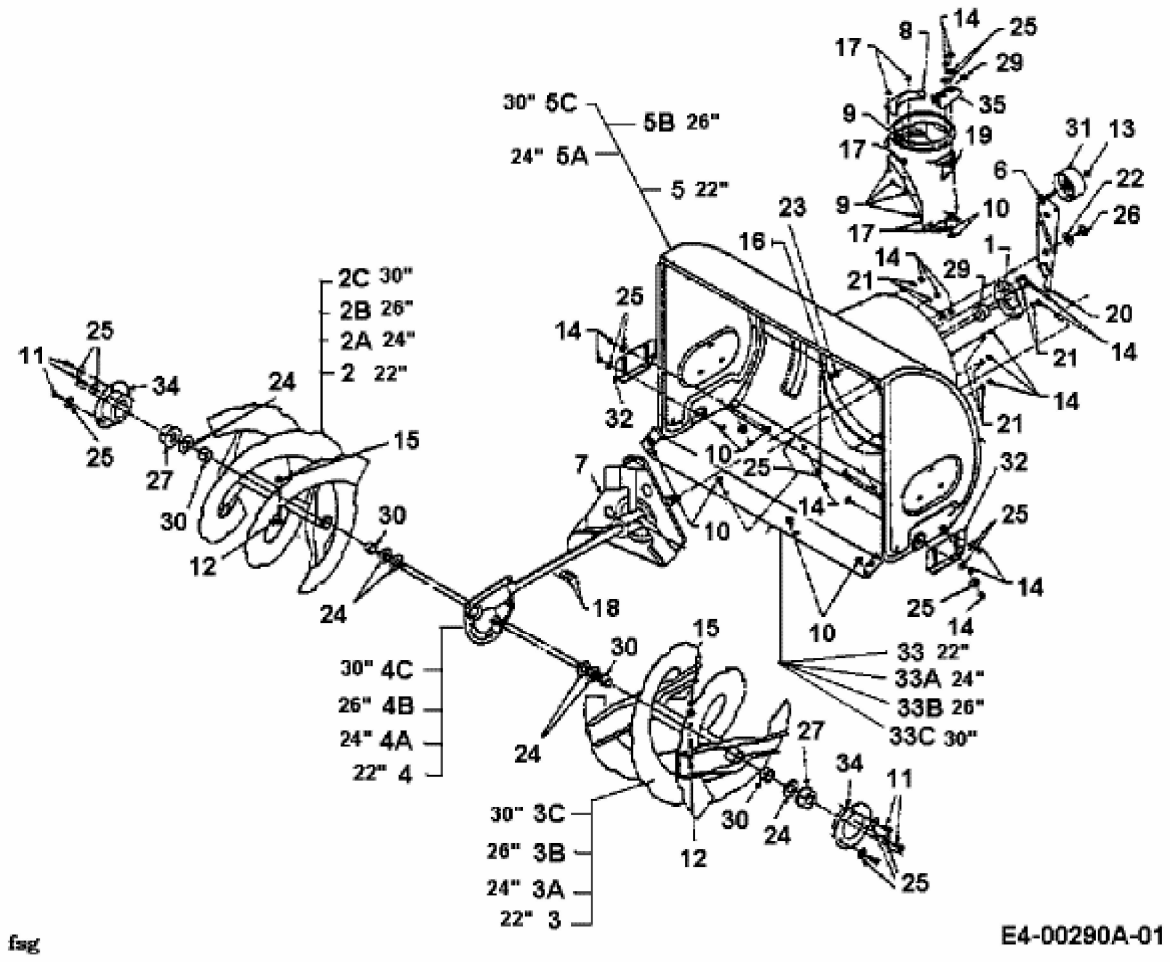
30" 5C
5B 26"
24" 5A
5 22"
2C 30"
2B 26"
2A 24"
2 22"
30" 4C
26" 4B
24" 4A
22" 4
30" 3C
26" 3B
24" 3A
22" 3
33 22"
33A 24"
33B 26"
33C 30"
fsg
E4-00290A-01