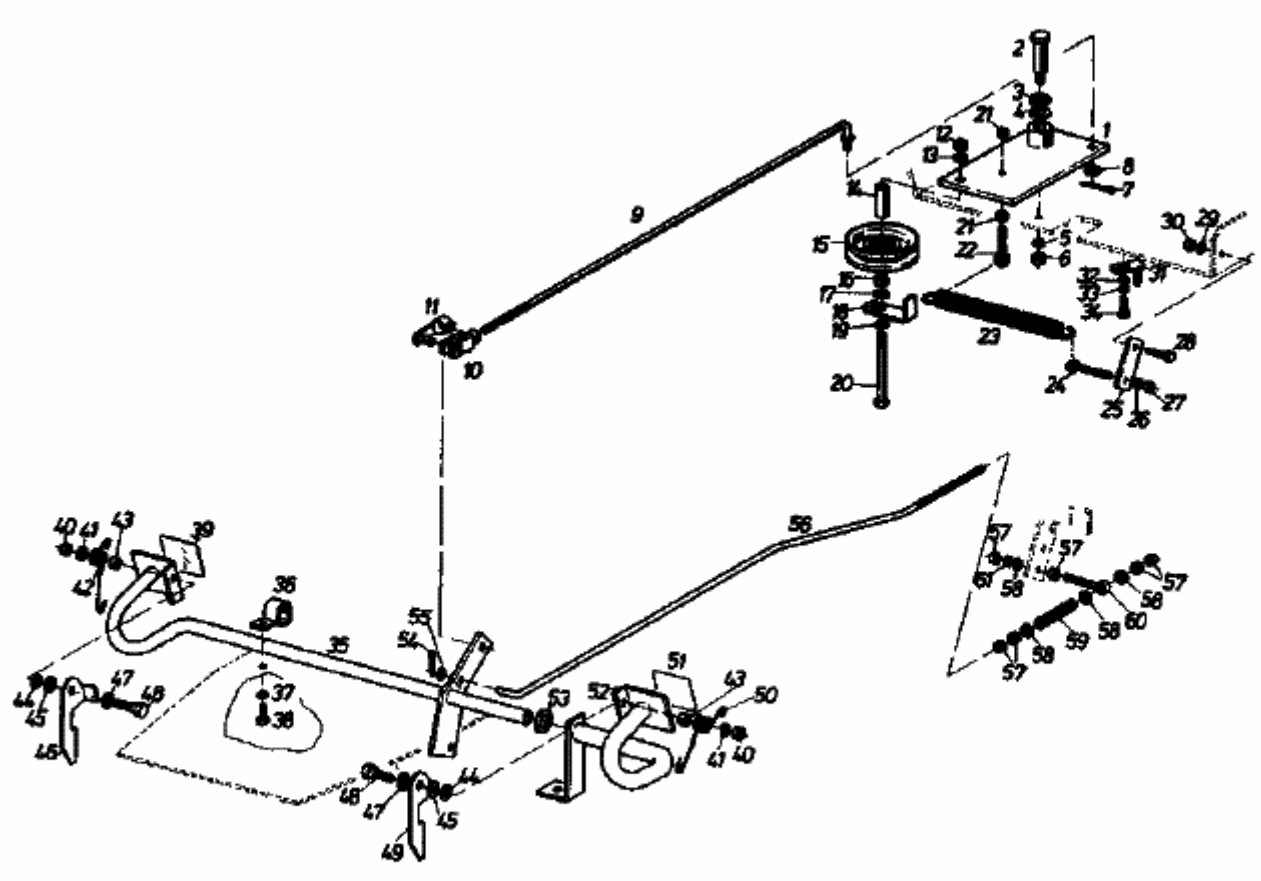SPIDER 170 SD 4 > 02840.01 (1988) > PEDALE