T 380/50 > 21B-382A678 (2007) > HOLM
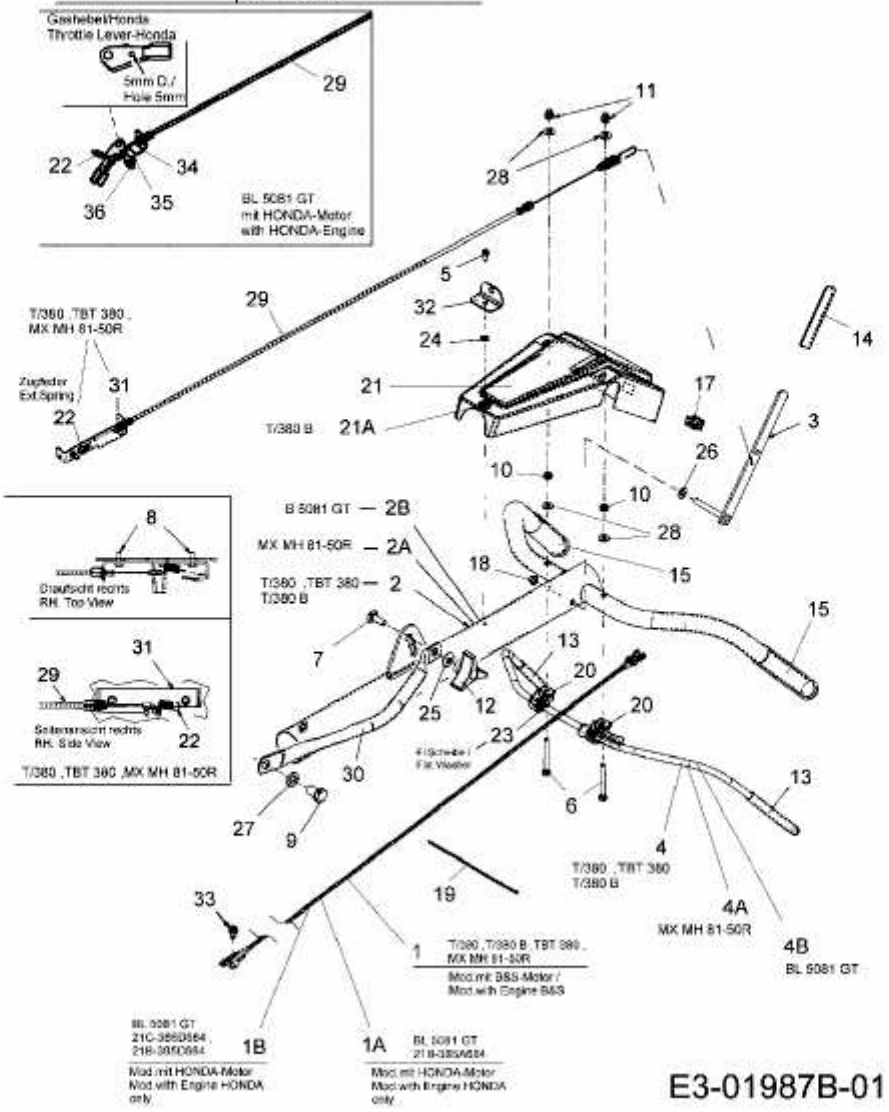
T/380	21B-382A678 , 21C-382A678
T/380	21B-383A602 , 21B-382A604
T/380 B	21C-382A602
TBT 380	21B-382A609
MX MH 81-50R	21B-382A667
BL 5081 GT	21C-385D684 , 21B-385D684 , 21B-385A684