Gasfernbedienung /
Throttle Control

Tillers Mod.410 , 430 , 450

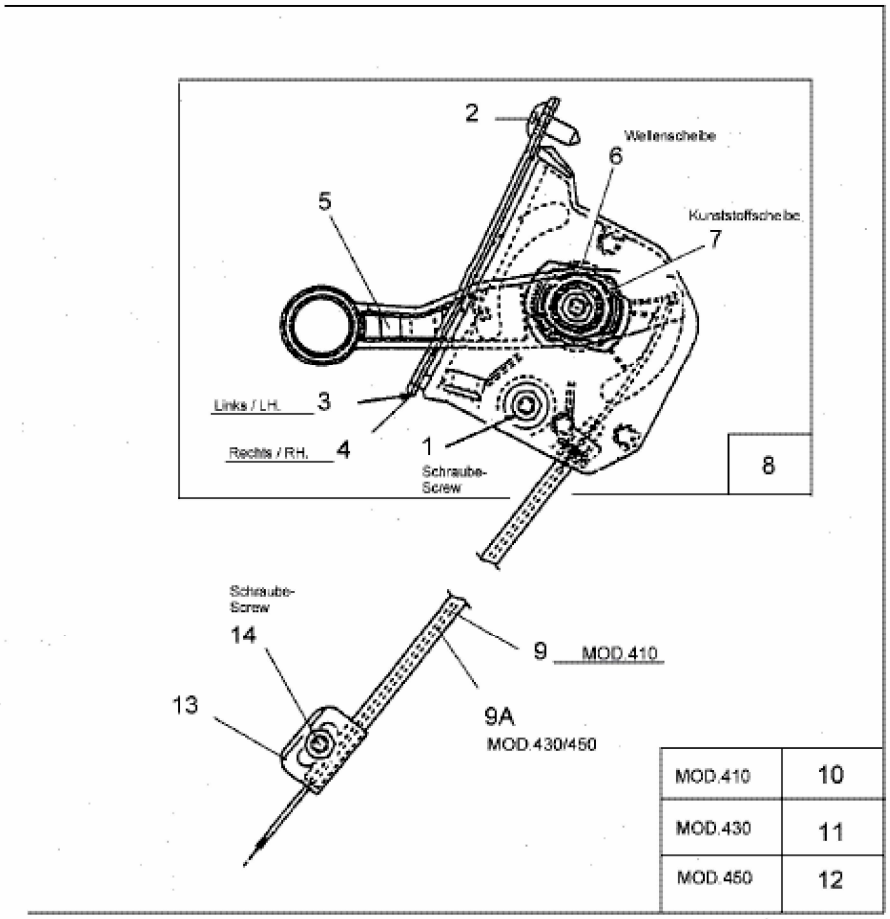

E4-00223C-01