T410 Rear Tine Tiller
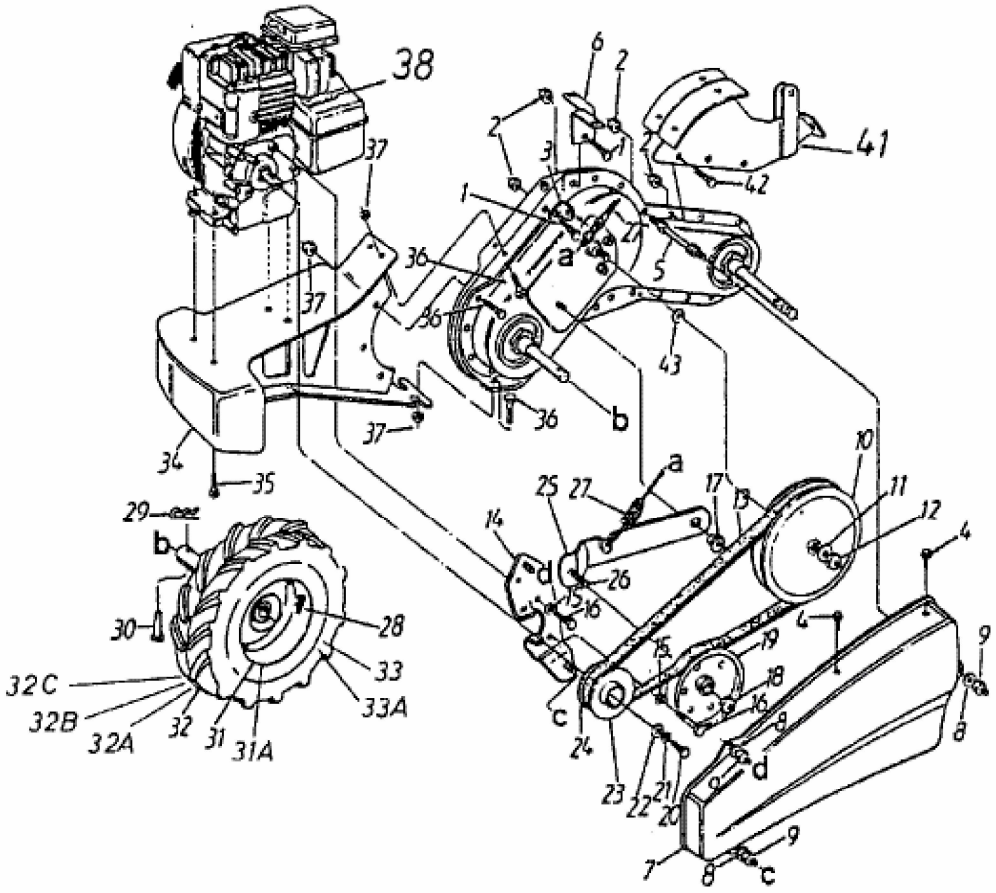
21AA414A678 Models 410 & 420 Series