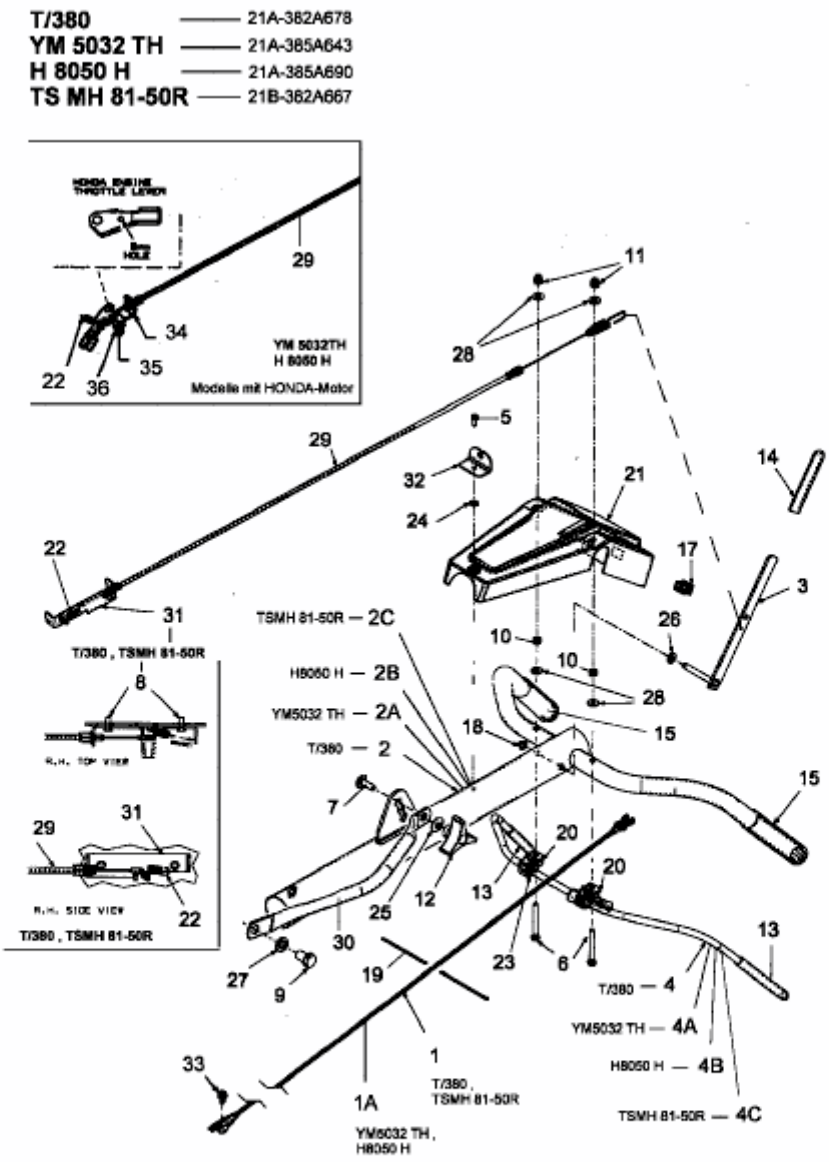YM 5032 TH > 21A-385A643 (2005) > HOLM