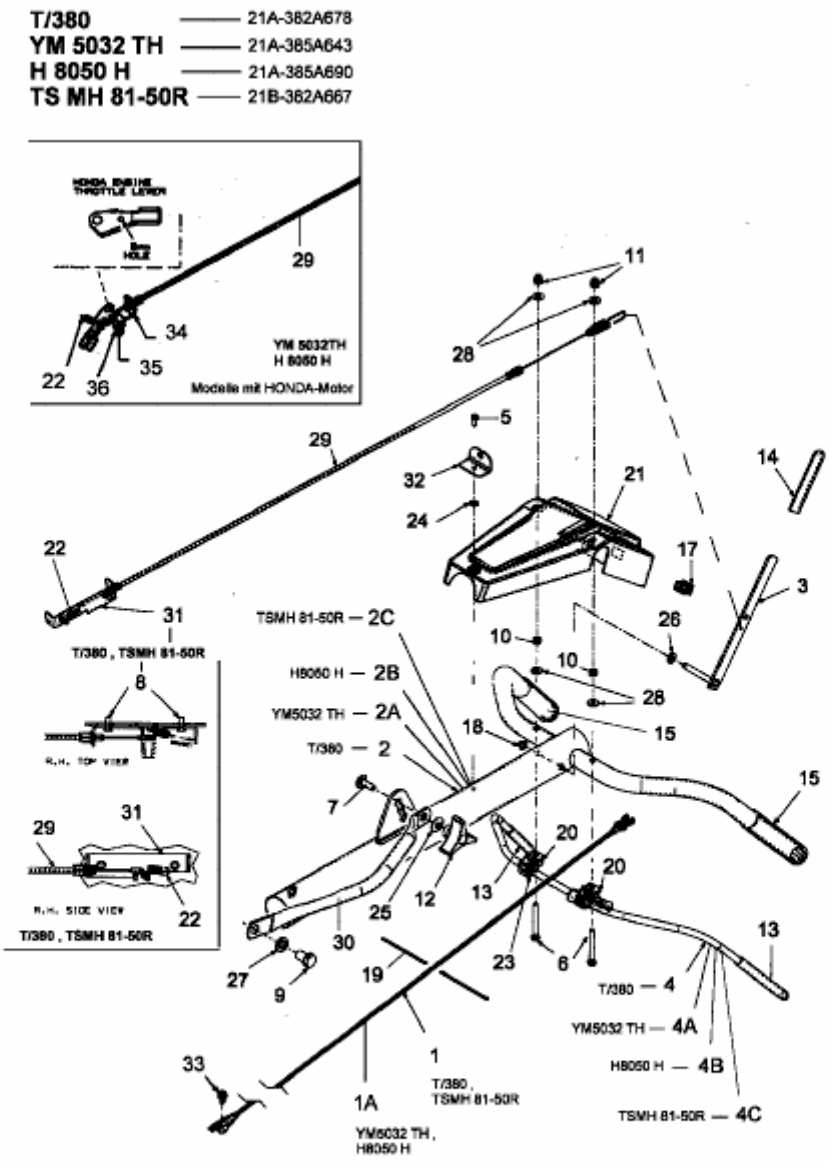T 380/50 > 21A-382A678 (2005) > HOLM