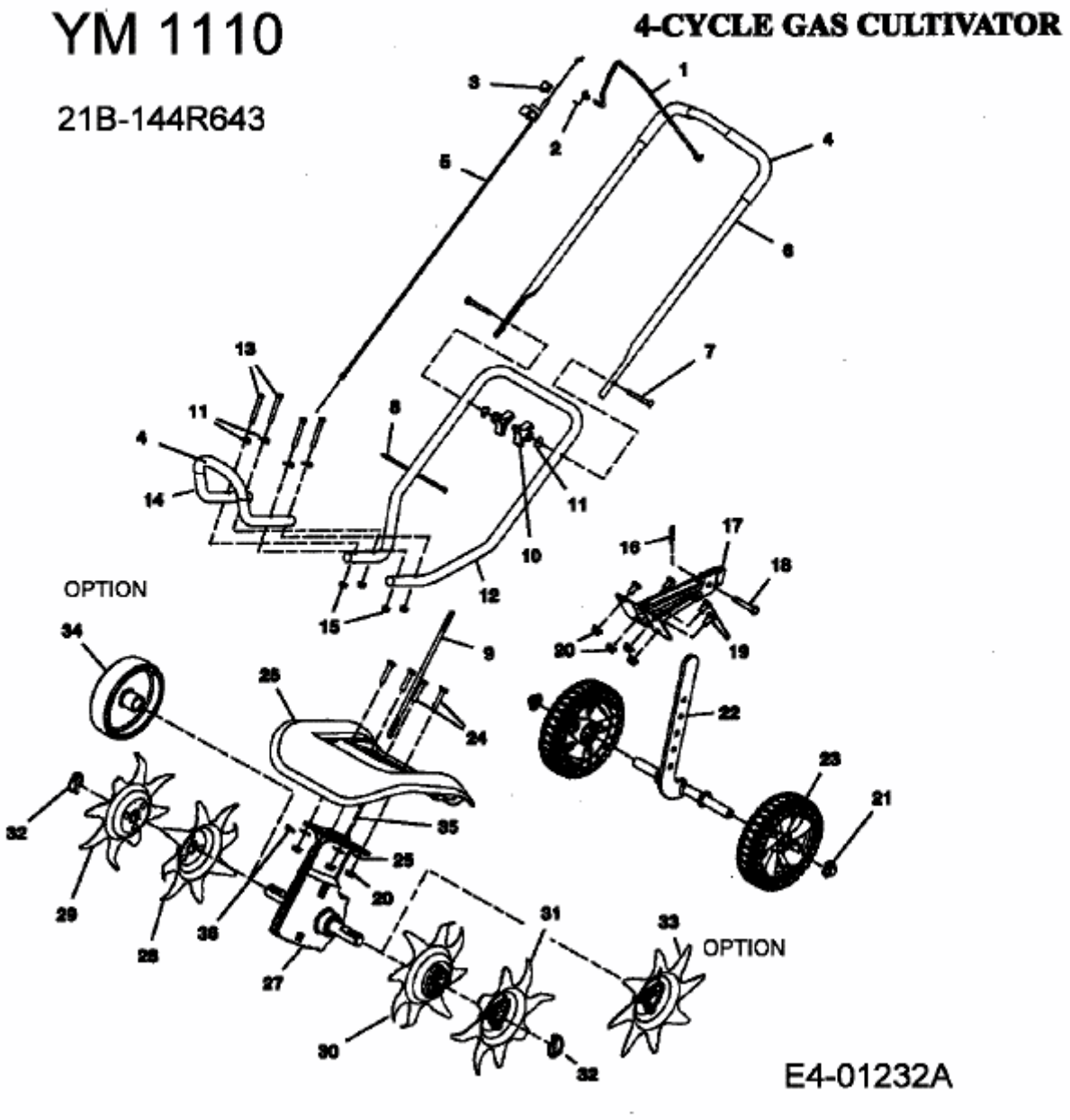
YM 1110
4-CYCLE GAS CULTIVATOR
21B-144R643
OPTION
OPTION
E4-01232A