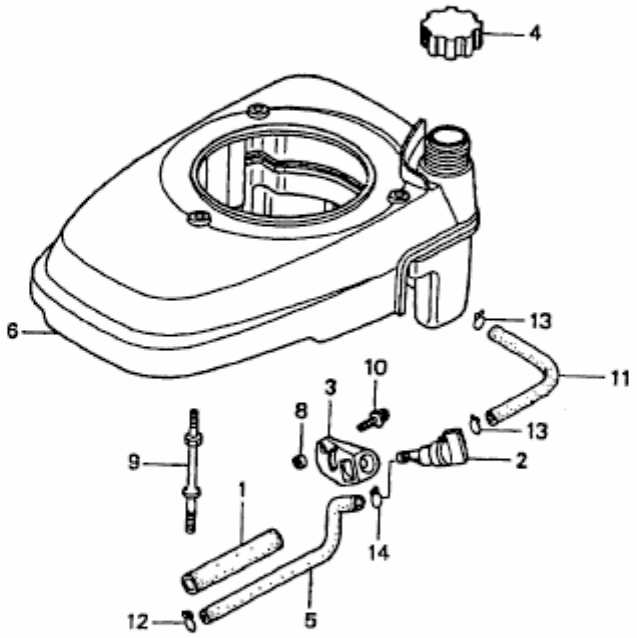GCV 135 > 2098070 (2003) > TANK