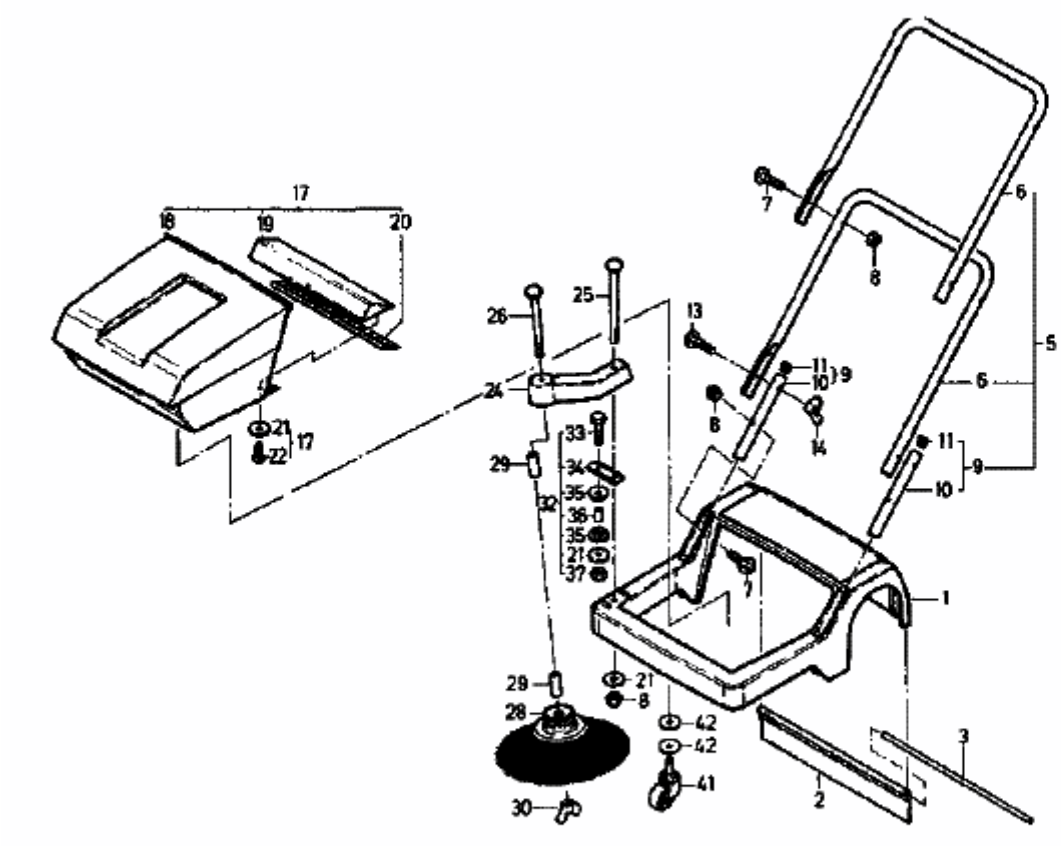B 55 > 02067.04 (1993) > HOLM