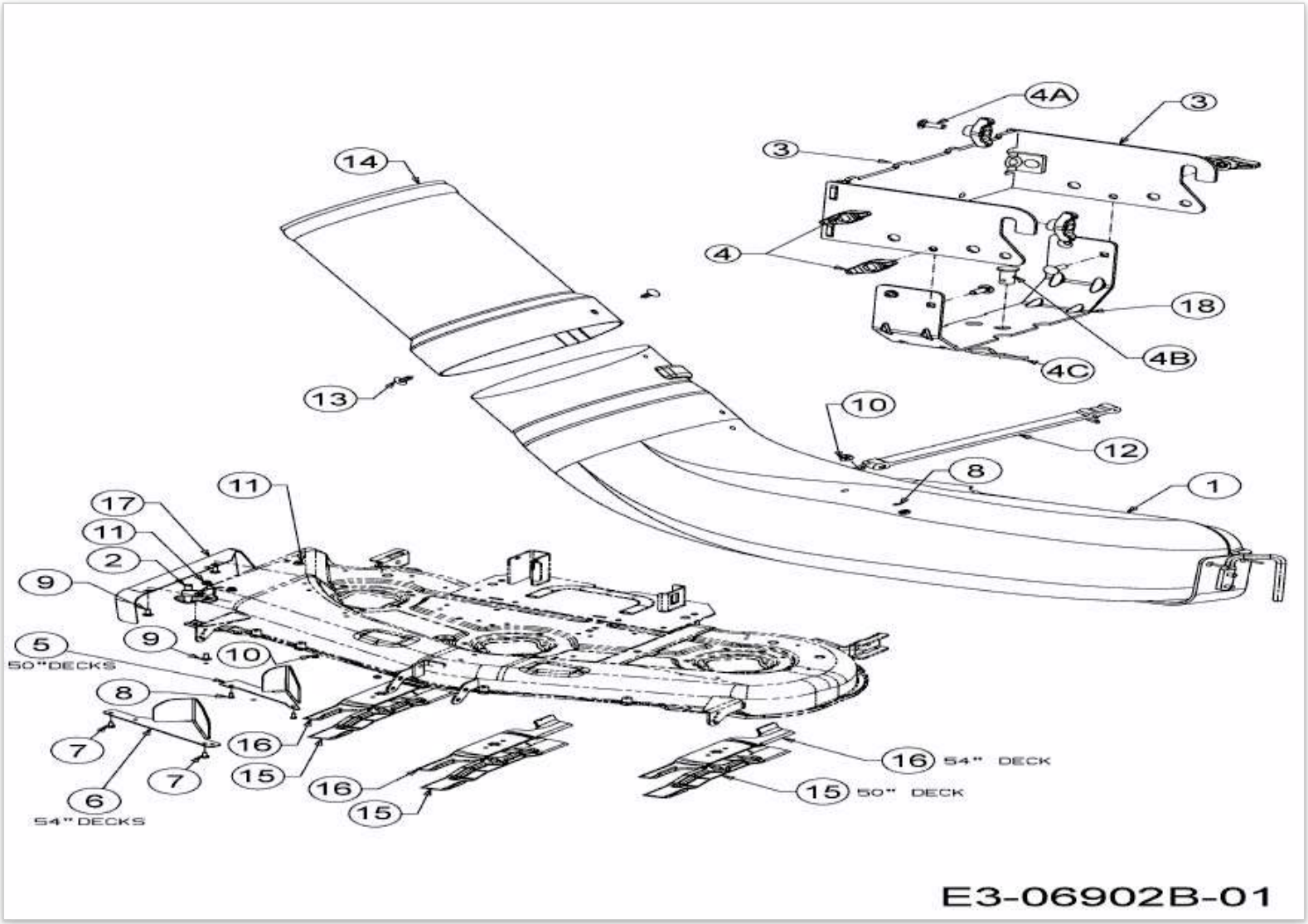
4A
3
3
14
4
18
4B
4C
13
10
12
8
1
11
17
11
2
9
9
10
5
50"DECKS
8
7
7
6
54" DECKS
16
15
16
15
16 54" DECK
15 50" DECK
E3-06902B-01