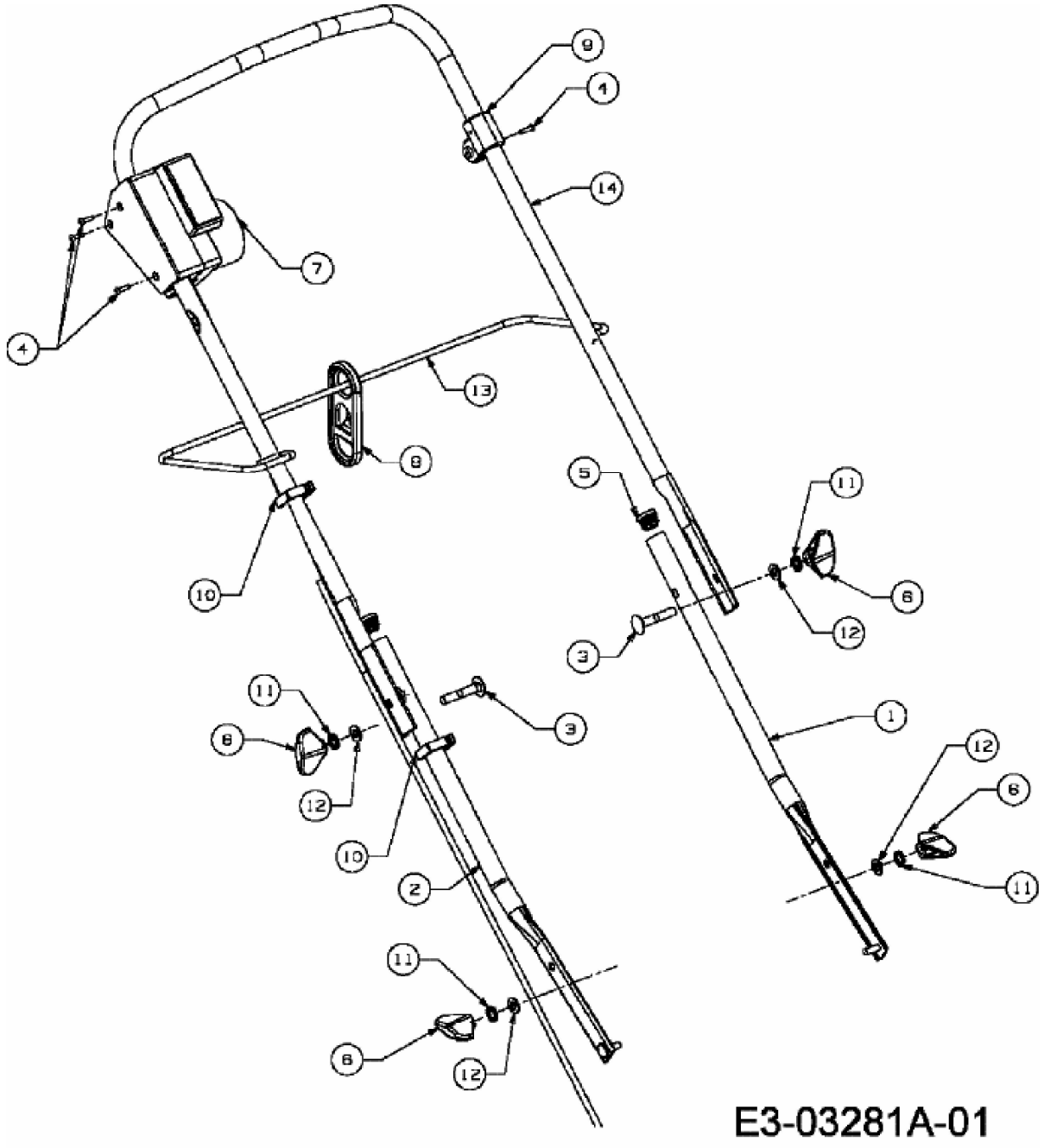MX 40 E > 18D-N4S-667 (2008) > HOLM